Instrumentteam PLUSS as

QALCOSONIC W1

ULTRASONIC WATER METER QALCOSONIC W1

TECHNICAL DESCRIPTION, INSTALLATION MANUAL AND USER GUIDE

PE_QW1_V07

TABLE OF CONTENTS

3 **SAFETY INFORMATIO**
3 **1 APPLICATION FIELD**
5 **2 TECHNICAL DATA**
6 **2.1** DISPLAY (LCD)
6 **2.2** DATA RECORDING AND STORAGE
7 **2.3** ALARMS
7 **2.4** EXTERNAL COMMUNICATION MODULES AND INTERFACES
8 **2.5** PULSE OUTPUTS IN TEST MODE
8 **2.6** POWER SUPPLY
8 **2.7** MECHANICAL DATA
8 **2.8** OPERATION CONDITIONS
8 **3 OPERATING PRINCIPLE**
9 **4 MARKING AND SEALING**
9 **4.1** MARKING
9 **4.2** SEALING
9 **5 INSTALATTION**
9 **5.1** GENERAL REQUIREMENTS
9 **5.2** CHECKING CONFIGURATION OF THE METER
10 **5.3** MOUNTING
10 **5.4** CHECKING OF INSTALLATION AND PARAMETER SETTING
10 **6 OPERATION**
10 **6.1** DISPLAY FUNCTIONS
11 **6.2** MENU STRUCTURE
12 **6.3** VIEWING THE READINGS IN NORMAL MODE (USER MENU)
13 **6.4** VIEWING THE READINGS IN VERIFICATION (TEST) MODE
13 **6.5** VOLUME READINGS IN VERIFICATION MODE
13 **6.6** INFO (STATUS) CODES
14 **6.7** VERIFICATION (TEST) MODE CONTROL
14 **6.8** ENDING OF VERIFICATION MODE
14 **7 VERIFICATION**
14 **8 TRANSPORTATION AND STORAGE REQUIREMENTS**
15 **ANNEX A**
15 **A.1** DN 20:
16 **A.2** DN 15:
17 **ANNEX B**
18 **WARRANTY**

EU DECLARATION OF CONFORMITY

AXIOMA Metering UAB, Veterinarų g. 52, Biruliškių k., Kauno raj., Lithuania, hereby declares that the water meter QALCOSONIC W1 conforms to the essential requirements of the following Directives:

2014/32/EU Directive 2014/32/EU of the European Parliament and of the Council of 26 February 2014 on the harmonisation of the laws of the Member States relating to the making available on the market of measuring instruments (recast).

2014/30/EU Directive 2014/30/EU of the European Parliament and of the Council of 26 February 2014 on the harmonisation of the laws of the Member States relating to electromagnetic compatibility (recast).

2014/35/EU Directive 2014/35/EU of the European Parliament and of the Council of 26 February 2014 on the harmonisation of the laws of the Member States relating to the making available on the market of electrical equipment designed for use within certain voltage limits.

2014/53/EU Directive 2014/53/EU of the European Parliament and of the Council of 16 April 2014 on the harmonisation of the laws of the Member States relating to the making available on the market of radio equipment.

Kaunas, 31/01/2020

EU-Type Examination Certificate No: LT-1621-MI001-034

Quality System Certificate No: KS-1621-MP-003.18

The Notified Body:

Laboratory of Heat Equipment Research and Testing of the Lithuanian Energy Institute, Lithuania, Notified Body Number 1621.

For EU Customers only - WEEE Marking

Marking of electrical and electronic equipment in accordance with Article 14 (2) of Directive 2012/19/EU

It is prohibited to dispose a meter marked with this sign into an unsorted municipal waste container together with other waste!

This symbol on the product indicates that it will not be treated as household waste. It must be handed over to the applicable take-back scheme for the recycling of electrical and electronic equipment. For more detailed information about the recycling of this product, please contact your local municipal office

SAFETY INFORMATION

Before beginning of installation works you must to read this document and follow its instructions.

The meter is battery-powered (3.6 V), risk factors during the meter installation and service fluid flowing within flow sensor with inner pressure up to 1,6 MPa and temperature up to 90°C.

- Only qualified technical personnel may install and maintain water meters. Personnel must be familiar with appropriate technical documentation and general safety instructions. It is necessary to follow general safety requirements during installation and maintenance process.
- Safety guarantees at installation and service of meter is:
  - Hermetic fitting of primary flow sensor into the pipeline,
  - Reliable fastening of water meter at installation.

WARNING!
Mounting of the sub-assemblies of water meter is permissible only after ensuring of absence of fluid and pressure in the pipeline.

CAUTION:
If this equipment is used in a manner not specified by the manufacturer, the protection provided by the equipment may be impaired.

- The meter can be used at ambient temperature: -15°C ... +70°C
- Storage and transportation temperature: -25°C ... +70°C (drained flow part)

1 APPLICATION FIELD

Ultrasonic water meter QALCOSONIC W1 is designed for measurement of cold and hot water consumption.

The meter corresponds to essential requirements of the Technical Regulation requirements Annexes I and MI 001. The meter complies with the requirements of European Standards EN ISO 4064 and requirements of OIML R49-1.

CLIMATIC ENVIRONMENTAL CONDITIONS:

Temperature range: from -15°C to +70°C

Humidity: condensing

Mechanical environment class: M1

Electromagnetic environment class: E2

ORDERING CODE COMBINATION OF THE METER *:

Meter	QALCOSONIC W1	QW1	– ☐ – ☐ – ☐ – ☐ – ☐ – ☐

Type

THE RATIO R (Q_3/Q_1):	CODE
250	1
315	2
400	3
800	4

PERMANENT FLOW RATE Q_3, M^3/H	OVERALL LENGTH L, MM	END CONNECTIONS	CODE
1,6	80	G ¾	11
1,6	105	G ¾	12
1,6	110	G ¾	13
1,6	165	G ¾	14
1,6	170	G ¾	15
2,5	80	G ¾	21
2,5	105	G ¾	22
2,5	110	G ¾	23
2,5	165	G ¾	24
2,5	170	G ¾	25
2,5	105	G1	31
2,5	110	G1	32
2,5	130	G1	33
2,5	165	G1	34
2,5	190	G1	35
4	105	G1	41
4	110	G1	42
4	130	G1	43
4	165	G1	44
4	190	G1	45

COMMUNICATION INTERFACE TYPE:	CODE
RF 868 MHz	0
RF 433 MHz	1
RF 915 MHz	2
RF 920,5 MHz	3
NB - IoT	4

COMMUNICATION PROTOCOL:	CODE
S1	1x
T1	2x
C1	3x
LORA WAN	X1
SIGFOX	X2

EXTRA COMMUNICATION INTERFACE:	CODE
NONE	0

TEMPERATURE CLASS:	CODE
Temperature class T 30	1
Temperature class T 30/90	2
Temperature class T 90	3
Temperature class T 50	4

2 TECHNICAL DATA

Ratio of the permanent flow rate to the lower limit of the flow-rate (selectable by the user):
Q_3/Q_1 = 250 , Q_3/Q_1 = 315, Q_3/Q_1 = 400, Q_3/Q_1 = 800

The technical data of the meter are provided in Table 1.1.

1.1. Table

PERMANENT FLOW RATE Q_3, M³/H	RATIO R Q3/Q1	OVERLOAD FLOW RATE Q_4, M³/H	MINIMUM FLOW RATE Q_1, M³/H	TRANSITIONAL FLOW RATE Q_2, M³/H	THRESHOLD VALUE, M³/H	JOINING TO THE PIPELINE (THREAD – G)	OVERALL LENGTH L, MM	PRESSURE LOSS CLASS ΔP (BAR X 100)
1,6	250	2	0,0064	0,010	0,001	G ¾	80	Δp 25
1,6	250	2	0,0064	0,010	0,001	G ¾	105	Δp 25
1,6	250	2	0,0064	0,010	0,001	G ¾	110	Δp 25
1,6	250	2	0,0064	0,010	0,001	G ¾	165	Δp 25
1,6	250	2	0,0064	0,010	0,001	G ¾	170	Δp 25
1,6	315	2	0,005	0,008	0,001	G ¾	80	Δp 25
1,6	315	2	0,005	0,008	0,001	G ¾	105	Δp 25
1,6	315	2	0,005	0,008	0,001	G ¾	110	Δp 25
1,6	315	2	0,005	0,008	0,001	G ¾	165	Δp 25
1,6	315	2	0,005	0,008	0,001	G ¾	170	Δp 25
1,6	400	2	0,004	0,0064	0,001	G ¾	80	Δp 25
1,6	400	2	0,004	0,0064	0,001	G ¾	105	Δp 25
1,6	400	2	0,004	0,0064	0,001	G ¾	110	Δp 25
1,6	400	2	0,004	0,0064	0,001	G ¾	165	Δp 25
1,6	400	2	0,004	0,0064	0,001	G ¾	170	Δp 25
2,5	250	3,125	0,01	0,016	0,001	G ¾	80	Δp 40
2,5	250	3,125	0,01	0,016	0,001	G ¾	105	Δp 40
2,5	250	3,125	0,01	0,016	0,001	G ¾	110	Δp 40
2,5	250	3,125	0,01	0,016	0,001	G ¾	165	Δp 40
2,5	250	3,125	0,01	0,016	0,001	G ¾	170	Δp 40
2,5	400	3,125	0,0062	0,010	0,001	G ¾	80	Δp 40
2,5	400	3,125	0,0062	0,010	0,001	G ¾	105	Δp 40
2,5	400	3,125	0,0062	0,010	0,001	G ¾	110	Δp 40
2,5	400	3,125	0,0062	0,010	0,001	G ¾	165	Δp 40
2,5	400	3,125	0,0062	0,010	0,001	G ¾	170	Δp 40
2,5	800	3,125	0,0031	0,005	0,001	G ¾	80	Δp 40
2,5	800	3,125	0,0031	0,005	0,001	G ¾	105	Δp 40
2,5	800	3,125	0,0031	0,005	0,001	G ¾	110	Δp 40
2,5	800	3,125	0,0031	0,005	0,001	G ¾	165	Δp 40
2,5	800	3,125	0,0031	0,005	0,001	G ¾	170	Δp 40
2,5	250	3,125	0,01	0,016	0,001	G1	105	Δp 25
2,5	250	3,125	0,01	0,016	0,001	G1	110	Δp 25
2,5	250	3,125	0,01	0,016	0,001	G1	130	Δp 25
2,5	250	3,125	0,01	0,016	0,001	G1	165	Δp 25
2,5	250	3,125	0,01	0,016	0,001	G1	190	Δp 25
2,5	400	3,125	0,0062	0,010	0,001	G1	105	Δp 25
2,5	400	3,125	0,0062	0,010	0,001	G1	110	Δp 25
2,5	400	3,125	0,0062	0,010	0,001	G1	130	Δp 25
2,5	400	3,125	0,0062	0,010	0,001	G1	165	Δp 25
2,5	400	3,125	0,0062	0,010	0,001	G1	190	Δp 25
4	250	5	0,016	0,025	0,002	G1	105	Δp 40
4	250	5	0,016	0,025	0,002	G1	110	Δp 40
4	250	5	0,016	0,025	0,002	G1	130	Δp 40
4	250	5	0,016	0,025	0,002	G1	165	Δp 40
4	250	5	0,016	0,025	0,002	G1	190	Δp 40
4	400	5	0,01	0,016	0,002	G1	105	Δp 40
4	400	5	0,01	0,016	0,002	G1	110	Δp 40
4	400	5	0,01	0,016	0,002	G1	130	Δp 40
4	400	5	0,01	0,016	0,002	G1	165	Δp 40
4	400	5	0,01	0,016	0,002	G1	190	Δp 40
4	800	5	0,005	0,008	0,002	G1	105	Δp 40
4	800	5	0,005	0,008	0,002	G1	110	Δp 40
4	800	5	0,005	0,008	0,002	G1	130	Δp 40
4	800	5	0,005	0,008	0,002	G1	165	Δp 40
4	800	5	0,005	0,008	0,002	G1	190	Δp 40

WORKING TEMPERATURE RANGE:	
Meter temperature class T30	(0,1°C ... 30°C)
Meter temperature class T50	(0,1°C ... 50°C)
Meter temperature class T30/90	(30°C ... 90°C)
Meter temperature class T90	(0,1°C ... 90°C)

- Maximum admissible working pressure (pressure class) 16 bar (MAP16)
- Flow profile sensitivity class U0 D0
- Volume measurement units m^3
- Resolution of a displaying device 0,001 m^3
- Displaying range 999999,999 m^3

The maximum permissible error (MPE) on volumes delivered at flow rate between the transitional flow rate Q_2 (included) and the overload flow rate Q_4 (included) is:

- When water temperature $\leq$ +30 °C $\pm$ 2 %
- When water temperature > +30 °C $\pm$ 3 %

The maximum permissible error (MPE) on volumes delivered at flow rate between the minimum flow rate Q_1 (included) and the transitional flow rate Q_2 (excluded) for water having any temperature is: $\pm$5%

If the flow-rate exceeds the maximum value Q_4:

- When the flow-rate Q $\leq 1.2 \cdot Q_4$, the flow-rate measurement and calculations are continued.
- When the flow-rate Q $> 1.2 \cdot Q_4$, calculations are performed using flow-rate value $1.2 \cdot Q_4$ and the info code "Maximum allowed value of flow rate is exceeded" is recorded and the duration of that status is calculated.

2.1 DISPLAY (LCD)

THE DEVICE IS EQUIPPED WITH 2-LINES LCD (LIQUID CRYSTAL DISPLAY):

Upper line with 9-digits for displaying measured volume of water:

- Readings in normal mode: m3 (three digits after decimal point).
- Readings in verification (TEST) mode: m3 (six digits after decimal point).

Lower line with 5-digits for displaying current flow rate in m3/h and special symbols for displaying operation modes. In the case of battery discharge, all integral readings and archive data shall be saved for at least 16 years and can be accessed by connecting a power battery in the operating condition.

2.2 DATA RECORDING AND STORAGE

In its memory, meter accumulates an archive of hourly, daily, and monthly measured parameters. Archive data can be read only by remote data reading means, mentioned in 2.4 paragraph. Data archive values, which are also additionally showed on the display, are specified in Paragraph 6.4.

THE FOLLOWING PARAMETERS OF EACH HOUR, DAY, AND MONTH ARE ACCUMULATED IN THE MEMORY OF THE METER:

1	Integral volume of water
2	Integral volume of water in the forward direction
3	Informational flow in the reverse direction
4	Maximum flow rate value and date
5	Info (Status) code
6	Total operating time
7	Operating time without error
8	Temperature

DATA LOGGER CAPACITY:

- Up to 1480 hours for hourly records.
- Up to 1130 days for daily records.
- Up to 36 last months for monthly records.

Archive data storage time not less than 36 months. Storage time of measured integrated parameters even if device is disconnected from power supply is not less than 16 years.

2.3 ALARMS

Qalcosonic W1 meter has integrated system that informs about certain alarms. Several of them are critical and being transmitted immediately. Other alarms or events are logged in status byte and transmitted within data telegrams.

BY DEFAULT ENABLED CRITICAL ALARMS (SINCE 2020.06.01):

- Leakage (occurs when constant flow rate within 24 hours is more than 0.25/0.5/1% of Q_3.
  Disappears after 1 hour, if constant flow rate within that hour is less than configured value).
- Burst (occurs when constant flow rate within 60 minutes is more than 5/10/20% of Q_3.
  Disappears after 32 seconds, if constant flow rate within that period of time is less than configured value).
- Freeze (occurs when water temperature reaches about 2/3/4/5°C).
- Tamper (occurs when meter is opened or damaged).

BY DEFAULT DISABLED CRITICAL ALARMS:

- Negative flow (occurs when meter detects negative flow).
- No consumption (occurs when there was no water for the last 3/7/30 days).

All these critical errors are also shown in status byte. It also might show indications of empty pipe, communication credits, battery lifetime and other.

2.4 EXTERNAL COMMUNICATION MODULES AND INTERFACES

Optical interface is integrated in Qalcosonic W1 meter by default. It is intended for data reading, changing parameters of meter and for outputting optical pulses in the test (verification) mode. It is activated by sending 1 second pulse sequence (5 minutes after the end of communication is automatically deactivated).

There is also NFC (Near Field Communication) interface integrated by default. It is intended for data reading only.

AVAILABLE COMMUNICATION MODULES FOR DATA TRANSMISSION (ONLY ONE OPTION MIGHT BE SELECTED WHEN PLACING THE ORDER):

- RF 868 MHz
- RF 433 MHz
- RF 915 MHz
- RF 920,5 MHz
- NB-IoT (frequency bands B1, B3, B5, B8, B20, B28)

DATA IN QALCOSONIC W1 METER CAN BE TRANSMITTED USING THE FOLLOWING PROTOCOLS:

- wMBus T1
- wMBus S1
- wMBus C1
- SIGFOX
- LORA WAN
- CoAP

All communication interfaces are intended for data reading and meter parametrisation. The meter is produced for being powered only from the internal battery. In order to save the battery, communication credit system is implemented into the meter. Time of communication through additional interfaces is automatically limited to save the battery (up to 20 minutes per month). Unused communication limit is summed up. If the limit is expired, the interface is blocked and the new time limit of communications will start only after the change of the hour (16 seconds for each next hour).

2.5 PULSE OUTPUTS IN TEST MODE

Pulse values are available only in Test Mode and it depends on the nominal flow rate Q_3. It is specified in the table below:

Permanent flow rate, Q_3, m^3/h	1,6	2,5	4,0
Pulse value, m^3/imp	0,001	0,002	0,004

2.6 POWER SUPPLY

Meter is powered with one or two internal AA-size 3.6V lithium (Li-SOCl2) batteries with a service life of at least 16 years. Batteries cannot be replaced. Accurate battery lifetime depends also on data transmission frequency.

2.7 MECHANICAL DATA

Dimensions of Qalcosonic W1 water meter are not greater than 75 mm x 77 mm x 190 mm (DN20, L190).

WEIGHT OF DIFFERENT SIZES OF QALCOSONIC W1 WATER METERS ARE SHOWN IN THE TABLE BELOW:

END CONNECTIONS (OVERALL LENGTH)	WEIGHT OF METER, NOT MORE THAN, KG
G3/4" (80 mm)	0,3
G3/4" (105 mm)	0,3
G3/4" (110 mm)	0,3
G3/4" (165 mm)	0,3
G3/4" (170 mm)	0,3
G1" (105 mm)	0,4
G1" (110 mm)	0,4
G1" (130 mm)	0,4
G1" (165 mm)	0,4
G1" (190 mm)	0,4

2.8 OPERATION CONDITIONS

Enclosure protection class: IP68

OPERATING CONDITIONS:

- ambient temperature form -15°C to 70°C
- relative humidity up to 100%, condensing
- atmospheric pressure 86 kPa to 106.7 kPa

Installation: Indoor or outdoor

Mechanical environment class: M1

Electromagnetic environment class: E2

3 OPERATING PRINCIPLE

Flow measuring principle is based on ultrasonic measurement method. Ultrasonic signal moves along the measuring section many times and the flow downstream between the ultrasonic sensors have to perform transmitter and receiver functions. From the results of time difference the flow rate is calculated and indicated in display.

WATER METER PERFORMS ALL NECESSARY MEASUREMENT AND DATA STORAGE FUNCTIONS. BELOW ARE THE MOST IMPORTANT:

- High stability in measuring water volume and detection characteristics of overload
- Calculation of the maximum values and their storage in archive
- Storage of necessary data for reports on set day yearly and monthly
- Archive data storage time 36 months
- Detection of faults
- Displaying values of parameters (optional) and displaying info codes
- Verification and service functions

4 MARKING AND SEALING

4.1 MARKING

There is following information on the front panel of the calculator of the meter: EC-type examination certificate number, manufacturer's trade mark, distributor logo (if applicable), type of meter, year of manufacture and serial number, permanent flow rate Q3 and ratio R (Q3/Q1), temperature class, maximum admissible working pressure (MAP), pressure loss class, installation sensitivity class of the meter, latest date by witch the meter shall be replaced, software version number, IP code, communication interface NB-IoT (if installed on the meter).

THE FOLLOWING IS INDICATED ON THE HOUSING OF WATER METER:

- Type of connection (thread or relative diameter)
- Flow direction

4.2 SEALING

The meter casing is imperceptibly closed. Any unautorized opening of the housing is impossible without damaging. Additional manufacturer protection is not applied. The manufacturers warranty does not apply if the upper cover is opened or connection between upper cover and the housing is damaged.

When the upper sealed cover is opened, the safety button that installed in the meter body is activated and error code appears on the meter display.

For sealing of meter after installation, there are provided holes in the meter body (See Annex B).

5 INSTALATTION

5.1 GENERAL REQUIREMENTS

PRIOR TO INSTALLING THE METER, IT IS NECESSARY:

- to check the complete set of the meter with that specified in the technical documentation.
- to check for any visible mechanical defects.
- to check the configuration of the meter and to change it if necessary.

The meters may only be installed by qualified specialists in accordance with the requirements of this document and the meter installation design.

5.2 CHECKING CONFIGURATION OF THE METER

Prior to installing the meter, it must be verified whether its configuration complies with the requirements for the specific facility and it must be changed if necessary.

THE FOLLOWING PARAMETERS SHALL BE VERIFIED (THE FACTORY SETTINGS FOR THE METER ARE THEIR STANDARD ONES):

- volume measurement units
- displayed volume resolution (point position)
- set day of year and month
- customer number
- internal clock time

NOTE. The transportation mode will turn off automatically (the possibility to change configuration parameters will be turned off) when the meter starts operation and the volume integrator has accumulated more than 10 litres.

5.3 MOUNTING

The temperature of the working environment should not be higher than 70°C.

No special requirements are established for the free space around the meter. It is important that nearby installations or structures do not rest against the housing of the meter and do not interfere with reading the data from the display. The meter should be installed at a safe distance from other devices emitting heat or strong electromagnetic field (in order to prevent disturbance of its working environment conditions).

Sizes and mounting dimensions of meter are provided in Annex A.

The straight pipelines in upstream and downstream the meter is not necessary (Qalcosonic W1 flow profile sensitivity class is U0 D0).

It is recommended to install meters in pipelines as far as possible from pumps, partitions, and elbows.

Water meters may be in all position (either horizontally, vertically or inclined).

Mandatory condition: in the operating mode, the pipe must have a pressure of not less than 30 kPa and the pipe must be fully filled with water.

Direction of the arrow on the meter must match with the flow direction in pipeline.

In order to avoid stresses in the pipelines, the distance between the meter connection points in the meter installation place shall correspond to the total length of meter with regard to the thickness of gaskets.

It is recommended to select meter installation place as far as possible from potential sources of vibration (for example, pumps).

The gaskets must match with the pipe diameter. During the installation, gasket must be exactly centered with the center of the pipe cross-section to avoid sticking out gaskets inside the pipe.

5.4 CHECKING OF INSTALLATION AND PARAMETER SETTING

If meter is installed correctly, the display of the meter should display flow readings (when there is flow).

It is necessary to check whether the meter is installed in the correct direction or there is no air in the system.

6 OPERATION

6.1 DISPLAY FUNCTIONS

WATER METER IS EQUIPPED WITH 2-LINE LCD (LIQUID CRYSTAL DISPLAY):

Upper line with 9-digits for displaying measured volume of water.

Lower line with 5-digits for displaying current flow rate and special symbols for displaying operation modes.

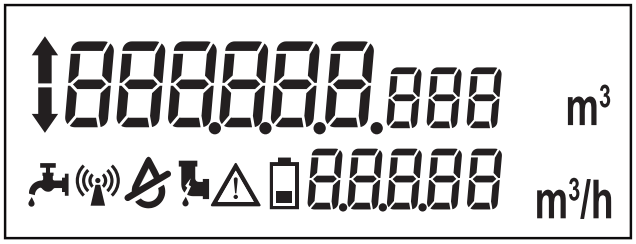

FLOW ARROW MEANINGS:

↑	flow is flowing forward
↓	flow is flowing backwards*
arrow is not displayed	flow does not flow

REMARK: for reverse flow, the meter shows backflow m^3/h and an error code is also sent, due to backflow.

The direct water volume summation record remains unchanged (unless chosen differently).

SPECIAL SYMBOLS ON LCD:

Symbol	Description
	Leakage
	Radio transmitter is active
	Pipeline is empty
	Pipe is cracked (Burst)
	Fault (Error)
	Battery replacement time

Error symbol ⚠ is shown when there is a significant meter operation error. For the info code, see the LCD menu item 1.7 in paragraph 6.2.

6.2 MENU STRUCTURE

Menu structure in normal mode is presented in Fig. 6.1.

Meter menu stages switches automatically. Individual stages, except total volume and info status code, could be disabled during installation. Error code is displayed only when an error occurs during meter operation. In normal mode this stage is skipped.

Fig. 6.1 Menu structure in normal mode

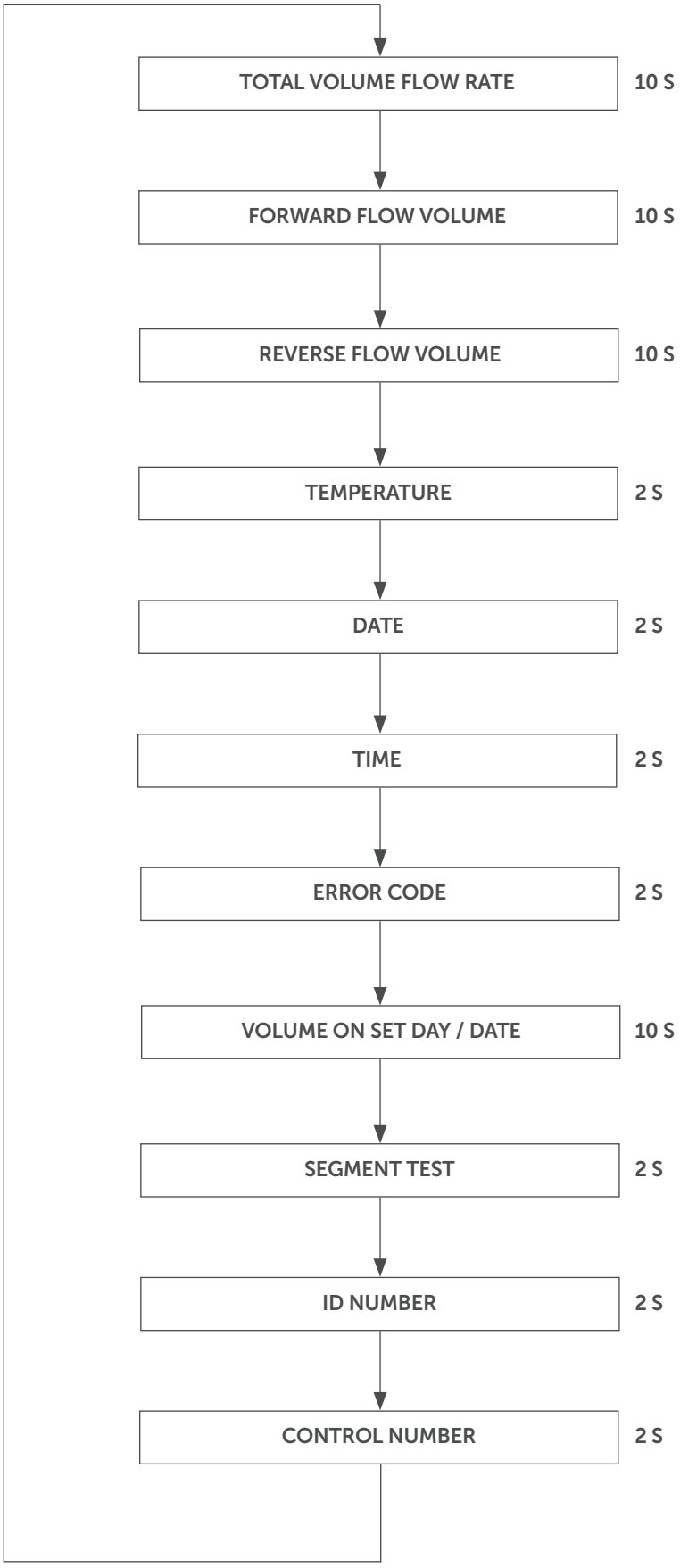

6.3 VIEWING THE READINGS IN NORMAL MODE (USER MENU)

REMARK: here the full list of shown parameters is represented. For the specific meter it can be reduced.

ID	PARAMETER	VALUE (EXAMPLE)	REMARKS
1.1	Total volume Flow rate	↑ 100.771 m³ 1.331 m³/h	
1.2	Forward flow volume	↑ 100.771 m³ Fwd	
1.3	Informational volume of total reverse flow	↓ 3.771 m³ rEV m³/h	
1.4	Water temperature value	24.0°C tEmP	
1.5	Date	2018.02.25 dAtE	
1.6	Real time	10.12 tImE	
1.7	Info (error) code	10.12 ⚠ Error	
1.8	Accumulated volume on set day and date	100.771 m³ cut 2018 02.25 cut	
1.9	Segment test	↕ 88888888 ftm³ Error ftm³/h	Changes each 1 second
1.10	User identification number	000000 134 id	
1.11	Control number	8800 Cn	

The indication of irrelevant parameters can be turned off. Also, parameters that are not relevant to the set meter configuration will not be indicated.

The indication of parameters can be turned on or off by means of the configuration software „W1 TOOL" through the optical interface when installing the meter (if the meter is in the transportation mode).

6.4 VIEWING THE READINGS IN VERIFICATION (TEST) MODE

Menu structure in verification (test) mode is presented in the Fig 6.2.

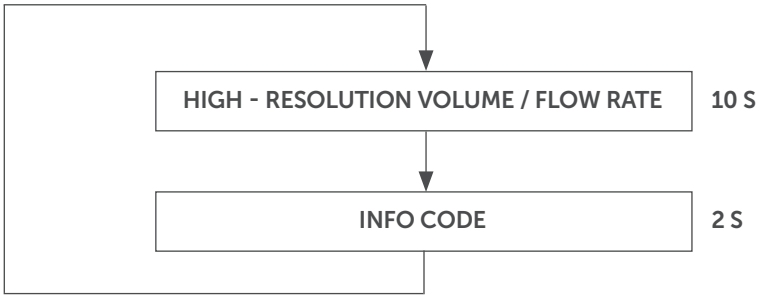

Fig. 6.2 Menu structure in verification (test) mode

6.5 VOLUME READINGS IN VERIFICATION MODE

PARAMETER	VALUE (EXAMPLE)	REMARKS
Total volume Flow rate	124.000 773 m³ 1.331 m³/h	Updated every 10 seconds. Flow rate value and inscription „tESt" changes every second
Forward flow volume	124.000 773 m³ tESt	

6.6 INFO (STATUS) CODES

Operating status is encoded by a 4-digit code on LCD:

CODE NUMBER	DESCRIPTION	
nXXX	0 - Normal operation 1 - Reconfiguration warning 2 - No consumption 4 - Damage of meter housing 8 - Calculator's hardware failure detected	
X**n**XX	0 - Normal operation	
	1 - Leakage	
	2 - Pipe is cracked (Burst)	
	4 - Optical communication temporarily stopped	
	8 - Low battery (less than 12 months lifetime left)	
XX**n**X	0 - Normal operation 4 - Hardware failure detected 8 - Hardware failure detected	
XXX**n**	0 - Normal operation	
	1 - No signal; the flow sensor is not filled with water	
	2 - Reverse flow 4 - Flow rate is greater than 1,25·Q4 (indicated q=1,25·Q4) 8 - Freeze alert	

Active info codes are added, if there is detected more than one error. Then the summary indicated info code will be as follows:

3 - corresponds errors 2 + 1
5 - corresponds errors 4 + 1
7 - corresponds errors 4 + 2 + 1
9 - corresponds errors 8 + 1
A - corresponds errors 8 + 2
B - corresponds errors 8 + 2 + 1
C - corresponds errors 8 + 4
D - corresponds errors 8 + 4 + 1
E - corresponds errors 8 + 4 + 2
F - corresponds errors 8 + 4 + 2 +1

6.7 VERIFICATION (TEST) MODE CONTROL

In verification (test) mode it is possible to achieve precise results within short measuring time.
In the test mode, the meter:

- indicates the increased resolution of flow values.
- forms volume pulses through the optical interface.

Volume pulse values (via optical interface) in verification mode „TEST" are presented in the table below.

PERMANENT FLOW RATE Q_3, M^3/H	VOLUME PULSE VALUE, L/IMP
1,6	0,3
2,5	0,3
4	0,3

Using an optical head and PC with W1 TOOL software the meter verification mode (TEST) can be activated.

Optical head should be connected to the computer USB interface. After placing optical head on the meter with the special holder and opening the program start up window, PC port number (to wich optical head is connected) is entered in the field „Com Port". Click „Wake up meter" button, then click the „Enter test mode" button. When the meter TEST mode is activated, meter readings are displayed with resolution of 1 ml. Optical pulse output of meter might be used or volume indications could be read directly from LCD.

6.8 ENDING OF VERIFICATION MODE

Using an optical head and PC with W1 TOOL software the meter verification mode (TEST) is returned to the operating mode. After opening the program startup window, click „Wake up meter", then click „Enter user mode". The meter returns to the normal mode.

Also, meter returns to its normal mode automatically in 24 hours after activation of TEST mode.

7 VERIFICATION

Metrological control of meter parameters is performed according to requirements defined in EN ISO 4064-1.

8 TRANSPORTATION AND STORAGE REQUIREMENTS

Packed meters may be transported in any type of covered vehicle. Equipment should be anchored reliably to avoid shock and possibility to shift inside vehicle. Meters should be protected against mechanical damage and shock. No aggressive chemical substances should be stored together because of corrosion hazard.

- Storage and transportation temperature: from -25°C to 70°C (drained flow part)
- Humidity: not more than 93%

ANNEX A

Sizes and dimensions of water meter QALCOSONIC W1

A.1 DN 20:

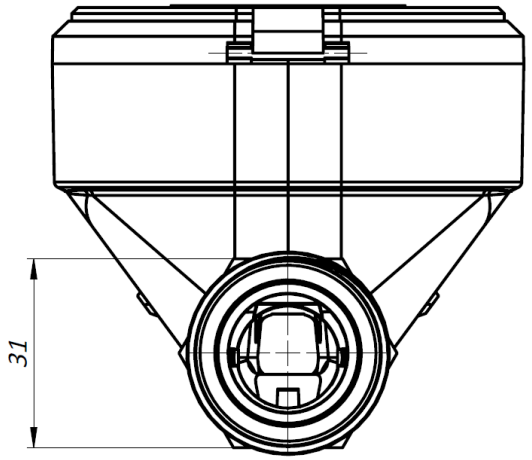

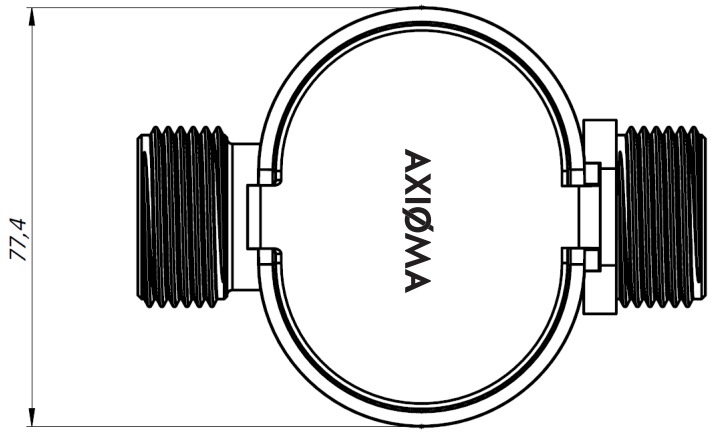

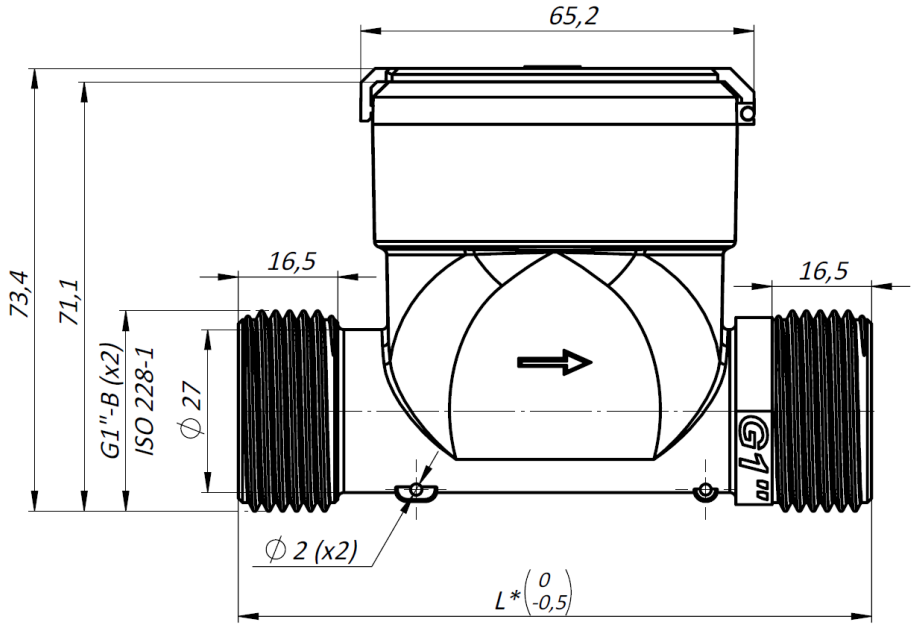

MODEL	L, MM
DN20 L105	105
DN20 L110	110
DN20 L130	130
DN20 L165	165
DN20 L190	190

ANNEX A

Sizes and dimensions of water meter QALCOSONIC W1

A.2 DN 15:

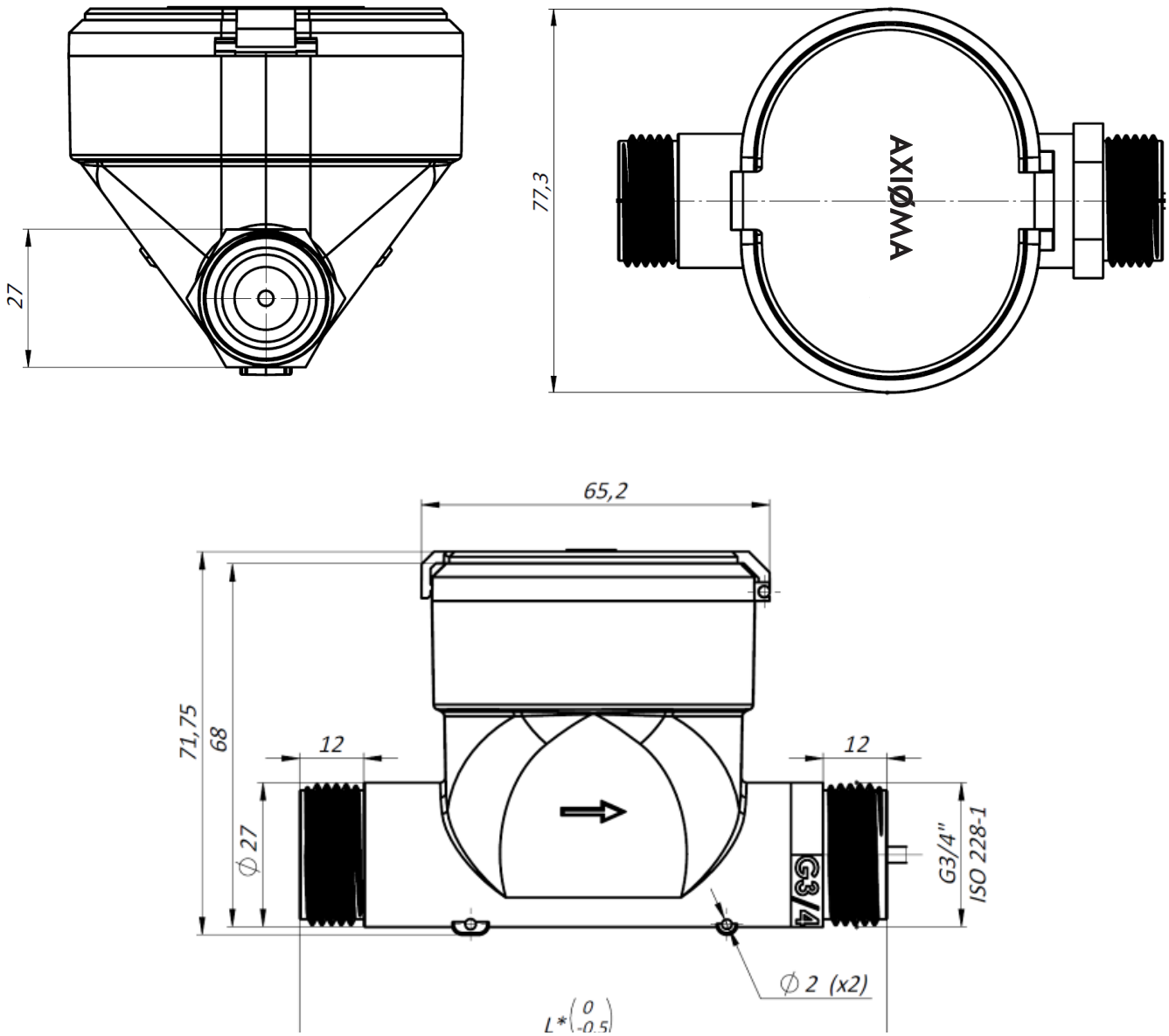

MODEL	L, MM
DN15 L80	80
DN15 L105	105
DN15 L110	110
DN15 L165	165
DN15 L170	170

ANNEX B
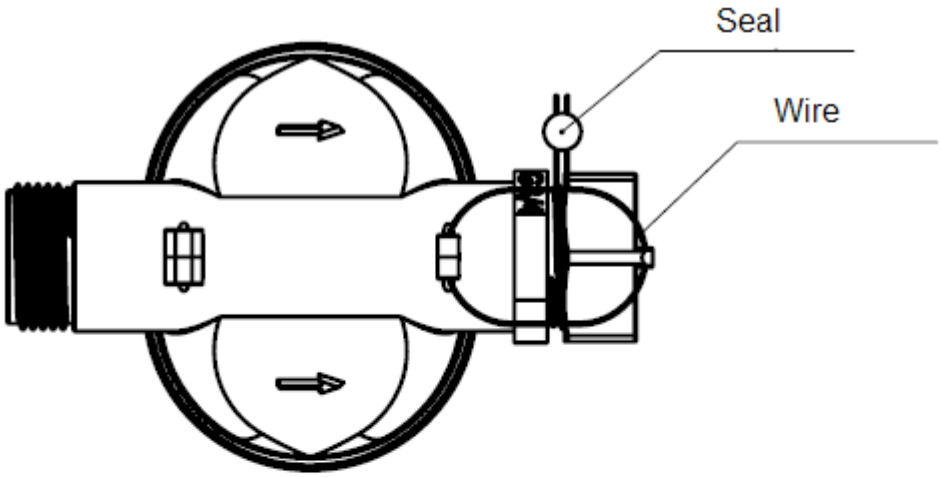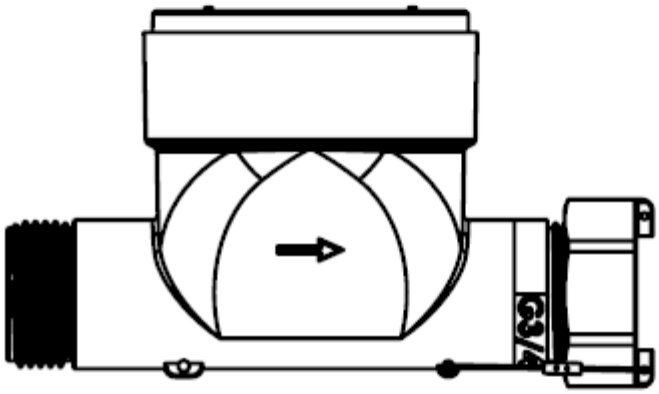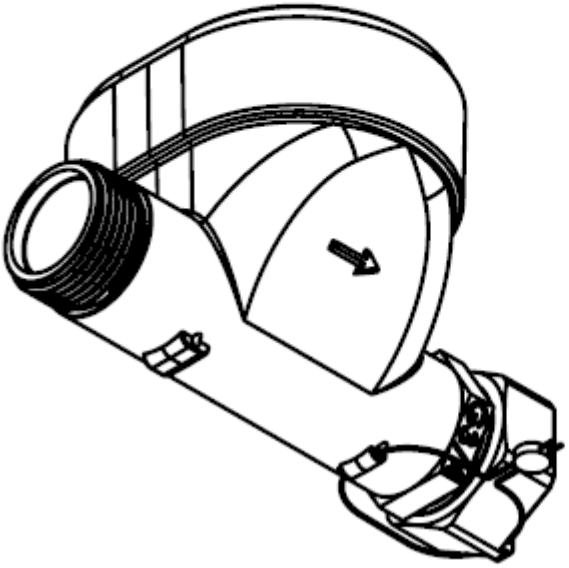
Example of sealing water meter after installation.