DIEHL
Metering

Instrumentteam PLUSS as
post@instrumentteampluss.no

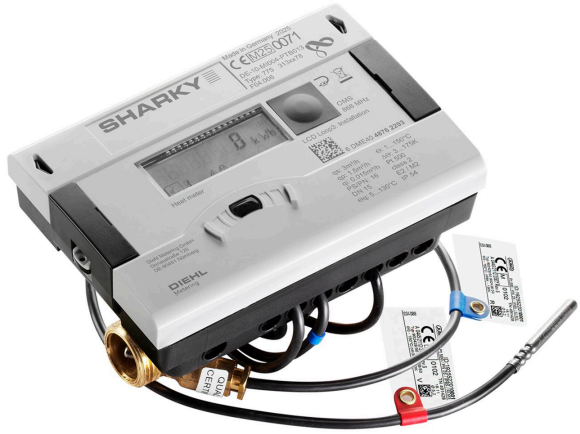

SHARKY 775

ULTRASONIC COMPACT ENERGY METER

APPLICATION

The ultrasonic compact energy meter can be used for measuring the energy consumption in heating / cooling application for billing purposes.

FEATURES

- Approval for ultrasonic meter with dynamic range up to 1:250 (qi:qp) in class 2 (depends on meter size), standard 1:100
- Improved power consumption --> longer battery lifetime
- Approved according MID in class 2 and 3 and PTB K 7.2 (cooling)
- High long term stability, verified at independent AGFW test
- Insensitive against dirt
- Versatile possibility of power supply
- Optional with integrated radio Open Metering Standard (868 or 434 MHz) Generation 3 Profile A or Generation 4 Profile B
- Individual remote reading (AMR) with add on modules Plug & Play
- Extensive readable data memory
- 3 communication interfaces (e. g. M-Bus + M-Bus + Radio)
- Significantly improved radio performance
- Leakage Detection

BASIC FEATURES

			SHARKY
Application			Heating - cooling - heating/with cooling tariff (cooling tariff at -dT and t_{flow} <20 °C)
Approval			MID (DE-10-MI004-PTB013) and PTB K7.2 for cooling (DE-16-M-PTB-0001)
Environmental class			Class C
Ambient class			Class E2 + M2
Ambient operating temperature		°C	+5 ... +55 (<35 °C have a positive lifetime effect)
Ambient storage temperature		°C	-25 ... +60 (>35 °C max. 4 weeks)
Communication			3 communication interfaces (e. g. M-Bus + M-Bus + Int. Radio; 2 primary adresses, 1 secondary adress)
Integrated Radio			Optional
Frequency band			868 or 434 MHz
Type of radio telegram			Open Metering Standard (OMS), Generation 3 Profile A or Generation 4 Profile B
Transmission data updating			Online - no time delay between value measurement and data transmission
Data transmission			Unidirectional
Sending interval			With A-cell: 180 s (up to 10.5 years lifetime); with D-cell: ~12 s (up to 16 years lifetime); with mains unit: ~12 s; depending on length of telegram (duty cycle)
Test possibilities			Via display, optical test pulses, test output or via NOWA software

BASIC FEATURES - CALCULATOR

			SHARKY
Protection class			IP 54
Battery supply			3.6 VDC A-cell up to 10.5 years lifetime (depending on configuration); 3.6 VDC D-cell up to 16 years lifetime
Mains supply			24 VAC (50 - 60 Hz); 230 VAC (50 - 60 Hz)
Temperature sensor type			Pt 100 or Pt 500 with 2-wire leads; Ø 5.2 / 6 mm or direct sensor
Cable length of temperature sensor			Pt 100: 1.9 m; Pt 500: 1.9 / 2.9 / 4.9 / 9.9 m
Absolute temperature range calculator	Θ	°C	1 ... 180
Measuring cycle - flow			With mains supply: ⅛ s; with A-cell battery: 1 s; with D-cell battery: 1 s
Measuring cycle - temperature sensor	T	s	With mains supply: 2 s; with A-cell battery: 16 s; with D-cell battery: 4 s
Starting temperature difference	$\Delta\Theta$	K	0.125
Min. temperature difference	$\Delta\Theta_{min}$	K	3
Max. temperature difference	$\Delta\Theta_{max}$	K	120 / 175 (heating) | 50 (cooling)
Interfaces standard			Optical ZVEI interface 300 ... 2400 Baud (auto Baud detected)
Interfaces optional			2 Slots for modules with M-Bus, L-Bus, LON works, LoRa, MOD Bus, RS232, RS485, pulse output, pulse input, combined pulse in-/output or analogue output
Extensive readable data memory			Periodical log[1]; 3 history logs; event memory (Flash/E^2Prom - non-volatile)

[1] Programmable storage interval (daily, weekly, monthly, ...)

BASIC FEATURES - FLOW SENSOR

		SHARKY
Mounting position flow sensor		Any position, calming sections not necessary, inlet installation / outlet installation / in field programmable
Protection class flow sensor		Heating IP 54 | Heating with cooling tariff / cooling acc. IP 65
Material of the flow sensor body		Brass or spheroidal cast iron (only q_p 15 up to q_p 100 m^3/h)
Temperature range heating	°C	5 ... 105 / 130 / 150 (depends on meter size and material)
Temperature range cooling	°C	5 ... 50
Temperature range heating/ cooling	°C	5 ... 105

DISPLAY

	SHARKY
Display indication	LCD, 8-digit
Units	MWh - kWh - GJ - Gcal - MBtu - gal - GPM - °C - °F - m^3 - m^3/h
Total values	99,999,999 - 9,999,999.9 - 999,999.99 - 99,999.999
Values displayed	Energy - Power - Volume - Flow rate - Temperature and more

INTERFACES

	SHARKY
Optical	ZVEI interface, for communication and testing, M-Bus protocol
M-Bus	Configurable telegram, according to EN13757-3, two wires with non polarity, auto baud detect (300 and 2400 baud), one M-Bus load
Wireless M-Bus	Open Metering Standard (OMS), Generation 3 Profile A or Generation 4 Profile B; frequency band 868 or 434 MHz
L-Bus	Adapter for external radio module, configurable telegram, according to EN13757-3, data reading and parametrization are via two wires with polarity reversal protection
Modbus RTU	Polarity independent, Voltage 12 - 24 V AC/DC, <150 mW; protocol - Modbus RTU, Channel - EIA-485 (galvanic isolated), Baud rate 1200 ... 115200. The default communication: 9600 bps Baud rate, 8N1 data format, Modbus Slave ID - 1
LonWorks	Polarity independent; Voltage 12 - 24 V AC/DC, <150 mW; Channel - TP/FT-10, Baud rate - 78 kbits per second, Data format - Differential Manchester Coding
LoRa	Five different telegrams can be selected via OTC App (AppStore Android). Up to 11 years lifetime with own battery and the modern ECO Mode. Transmission interval varies with the connection quality.
NB-IoT*	Compatible in Slot 1 with internal antenna, with external D-Cell battery, 13+1 years battery lifetime with daily upload of 24 hourly values. Configurable with NFC connection via OTC App (AppStore Android).
RS232	Serial interface for communication with external devices, a special data cable is required, M-Bus protocol, 300 and 2400 baud
RS485	Serial interface for communication with external devices, power supply with 12 V ± 5 V, M-Bus protocol, 2400 baud
Pulse output	Module with 2 Open Collector pulse outputs (potential-free), output 1: 4 Hz (pulse width 125 ms), pulse or static conditions (e.g. errors), output 2: 200 Hz (pulse width ≥ 5 ms), configurable via IZAR@MOBILE 2 software
Pulse input	Module with 2 pulse inputs, max. 20 Hz, configurable via IZAR@MOBILE 2 software, data can be transferred remotely
Combined pulse in-/output	Module with 2 pulse inputs and 1 pulse output, configurable via IZAR@MOBILE 2 software, needed for leak detection
Analogue output	Module for 4 ... 20 mA with 2 programmable passive outputs, programmable value in case of error

* Starting with August 1, 2025, only devices with firmware F04.006 or newer may be combined with NB-IoT modules with firmware 1.4.0 or newer, in order to ensure compliance with the essential requirements according to art. 3(3) d and art. 3(3) e of Directive 2014/53/EU ('RED Cybersecurity'). The firmware version can be read out with the OTC app.

TECHNICAL DATA FLOW SENSOR

Nominal flow rate	**q_p**	**m^3/h**	**0.6**	**1.5**	**1.5**	**2.5**	**6**	**6**	**6**
Nominal diameter	DN	mm	15	15	20	20	25	32	40
Overall length	L	mm	110	110	130	130	260	260	150
Starting flow rate		l/h	1	2.5	2.5	4	10	10	10
Minimum flow rate (DR 1:250)	q_i	l/h	-	6	6	10	24	24	-
Minimum flow rate (DR 1:100)	q_i	l/h	6	15	15	25	60	60	60
Maximum flow rate	q_s	m^3/h	1.2	3	3	5	12	12	12
Overload flow rate		m^3/h	2.5	4.6	4.6	6.7	18.4	18.4	18.4
Operating pressure	PN	bar	16/25	16/25	16/25	16/25	16/25	16/25	16/25
Pressure loss at q_p	Δp	mbar	95	130	115	110	190	190	190
Temp. range heating - brass body		°C	5 ... 130	5 ... 130	5 ... 130	5 ... 130	5 ... 150	5 ... 150	5 ... 150
Temp. range heating - spheroidal cast iron body		°C	-	-	-	-	-	-	-
kv value		m^3/h	1.95	4.16	4.42	7.54	13.76	13.76	13.76

Nominal flow rate	**q_p**	**m^3/h**	**10**	**15**	**25**	**40**	**60**	**100**
Nominal diameter	DN	mm	40	50	65	80	100	100
Overall length	L	mm	300	270	300	300	360	360
Starting flow rate		l/h	20	40	50	80	120	120
Minimum flow rate (DR 1:250)	q_i	l/h	40[1]	60[1]	100[1]	160	240[1]	240[1]
Minimum flow rate (DR 1:100)	q_i	l/h	100	150	250	400	600	1000
Maximum flow rate	q_s	m^3/h	20	30	50	80	120	120
Overload flow rate		m^3/h	24	36	60	90	132	132
Operating pressure	PN	bar	16/25	16/25	16/25	16/25	16/25	16/25
Pressure loss at q_p	Δp	mbar	140	165	75	80	75	210
Temp. range heating - brass body		°C	5 ... 150	5 ... 150	5 ... 150	5 ... 150	5 ... 150	5 ... 150
Temp. range heating - spheroidal cast iron body		°C	-	5 ... 105	5 ... 105	5 ... 105	5 ... 105	5 ... 105
kv value		m^3/h	26.73	36.93	91.29	141.42	219.09	218.22

[1] Only for horizontal installation

DIMENSIONS THREAD VERSION

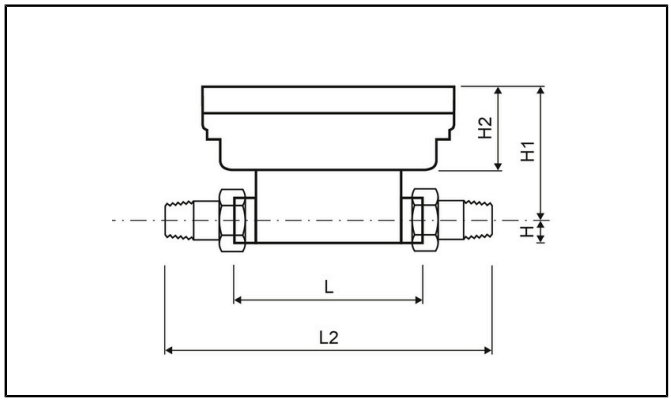

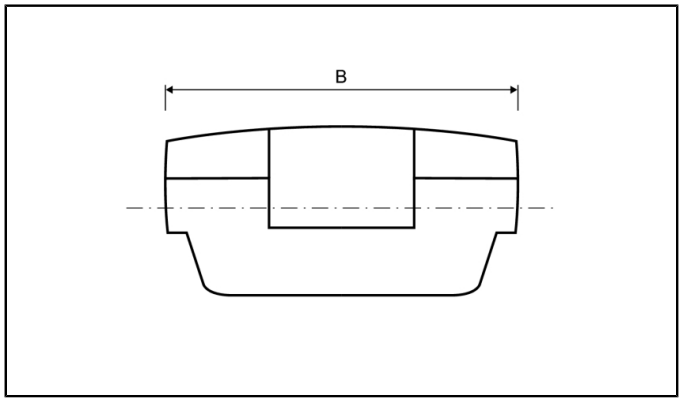

Nominal flow rate	q_p	m^3/h	0.6	1.5	1.5	2.5	6	6	6
Nominal diameter	DN	mm	15	15	20	20	25	32	40
Overall length	L	mm	110	110	130	130	260	260	150
Overall length with coupling	L2	mm	190	190	230	230	380	380	-
Length of calculator	L1	mm	150	150	150	150	150	150	150
Height	H	mm	14.5	14.5	18	18	23	23	23
Height	H1	mm	82	82	84	84	88.5	88.5	88.5
Height of calculator	H2	mm	54	54	54	54	54	54	54
Width of calculator	B	mm	100	100	100	100	100	100	100
Connection thread on meter		Inch	G¾B	G¾B	G1B	G1B	G1¼B	G1½B	G2B
Connection thread of coupling		Inch	R½	R½	R¾	R¾	R1	R1¼	R1½
Weight[1]		kg	0.76	0.76	0.85	0.85	1.5	1.5	1.52

Nominal flow rate	q_p	m^3/h	10	15	25	40	60	100
Nominal diameter	DN	mm	40	50	65	80	100	100
Overall length	L	mm	300	270	300	300	360	360
Overall length with coupling	L2	mm	440	-	-	-	-	-
Length of calculator	L1	mm	150	-	-	-	-	-
Height	H	mm	33	-	-	-	-	-
Height	H1	mm	94	-	-	-	-	-
Height of calculator	H2	mm	54	-	-	-	-	-
Width of calculator	B	mm	100	-	-	-	-	-
Connection thread on meter		Inch	G2B	-	-	-	-	-
Connection thread of coupling		Inch	R1½	-	-	-	-	-
Weight[1]		kg	3.1	-	-	-	-	-

[1] Meter with A-cell, without modules, 1.4 m cable length, 1.9 m cable length of temperature sensor Ø 5.2 mm

DIMENSIONS FLANGE VERSION

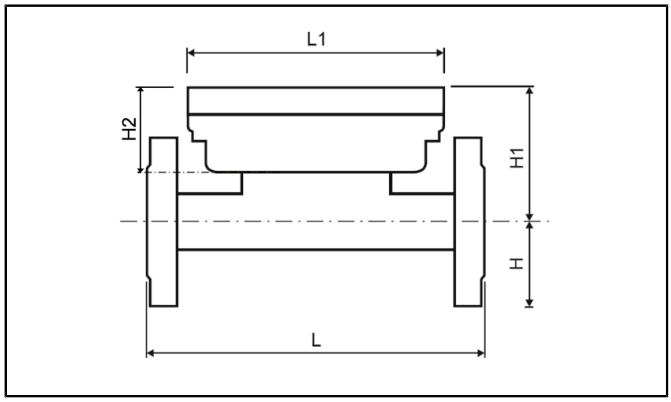

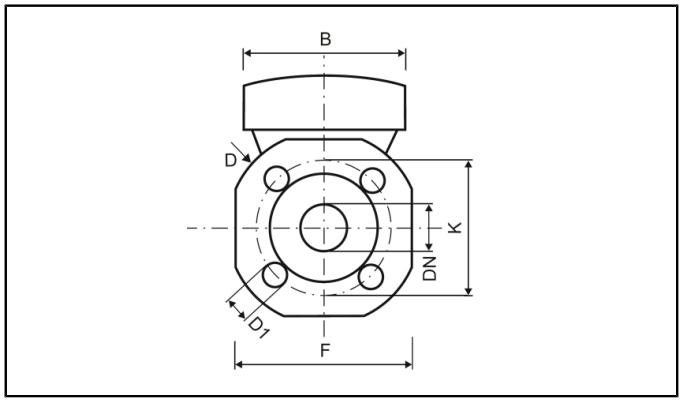

Nominal flow rate	q_p	m^3/h	0.6	1.5	1.5	2.5	6	6	6
Nominal diameter	DN	mm	15	15	20	20	25	32	40
Overall length	L	mm	110	110	130	130	260	260	150
Length of calculator	L1	mm	-	-	-	-	150	150	-
Height	H	mm	-	-	-	-	50	62.5	-
Height	H1	mm	-	-	-	-	88.5	88.5	-
Height of calculator	H2	mm	-	-	-	-	54	54	-
Width of calculator	B	mm	-	-	-	-	100	100	-
Flange dimension	F	mm	-	-	-	-	100	125	-
Flange diameter	D	mm	-	-	-	-	114	139	-
Hole circle diameter	K	mm	-	-	-	-	85	100	-
Screwhole diameter	D1	mm	-	-	-	-	14	18	-
Number of screwholes		pcs	-	-	-	-	4	4	-
Weight brass body[2]		kg	-	-	-	-	3.5	4.8	-
Weight spheroidal cast iron body[2]		kg	-	-	-	-	-	-	-

Nominal flow rate	q_p	m^3/h	10	15	25	40	60	100
Nominal diameter	DN	mm	40	50	65	80	100	100
Overall length	L	mm	300	270	300	300	360	360
Length of calculator	L1	mm	150	150	150	150	150	150
Height	H	mm	69	73.5	85	92.5	108	108
Height	H1	mm	94	99	106.5	114	119	119
Height of calculator	H2	mm	54	54	54	54	54	54
Width of calculator	B	mm	100	100	100	100	100	100
Flange dimension	F	mm	138	147	170	185	216	216
Flange diameter	D	mm	148	163	184	200	235	235
Hole circle diameter	K	mm	110	125	145	160	180[1]/190	180[1]/190
Screwhole diameter	D1	mm	18	18	18	19	19[1]/22	19[1]/22
Number of screwholes		pcs	4	4	8	8	8	8
Weight brass body[2]		kg	6.4	7.0	8.9	10.9	16.4	16.4
Weight spheroidal cast iron body[2]		kg	-	5.9	7.7	9.6	15.2	15.2

[1] Value for PN 16 housing
[2] Meter with A-cell, without modules, 1.4 m cable length, 1.9 m cable length of temperature sensor Ø 5.2 mm

PRESSURE LOSS GRAPH / TYPICAL ERROR GRAPH

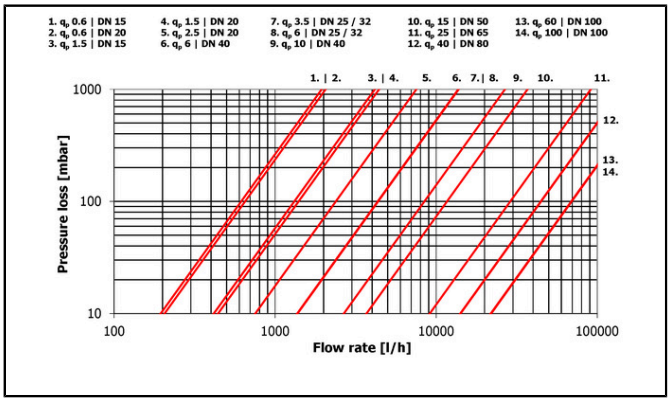

Pressure loss graph

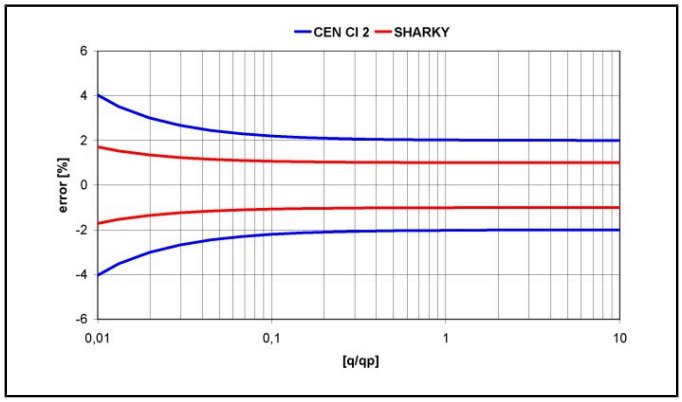

Typical error graph

REACH

Information pursuant to Article 33 (1) of Regulation (EC) No 1907/2006 of the European Parliament and of the Council of 18 December 2006:
This product series contains components with the following substances in a concentration of more than 0.1% weight by weight (w/w):
- Lead (CAS no.: 7439-92-1)
- Lead titanium zirconium oxide (CAS no.: 12626-81-2)

Economic Actor Information

Applicable regulation and legal obligations for products may change.

DIEHL METERING monitors applicable regulation to ensure their products comply at the date of placing on the market.

Each economic actor making products available on the market thereafter must independently keep informed about the current applicable regulation.

For questions, please contact: metering-germany-info@diehl.com

Instrumentteam PLUSS as
post@instrumentteampluss.no