BACnet MS/TP Module

For Modular Heat Meter Qalcosonic E3/E4

Description:

BACnet is a data communication protocol for building automation and controls network. BACnet is both an international (ISO) and ANSI standard for interoperability between cooperating building automation devices. Developed under the auspices of the American Society of Heating, Refrigerating and Air-Conditioning Engineers (ASHRAE).

The module has a separate, independent processor for retrieving data from the meter by configuring it at a selected interval. Later, the processed data is transmitted to the reading systems via the RS485 interface.

Connection:

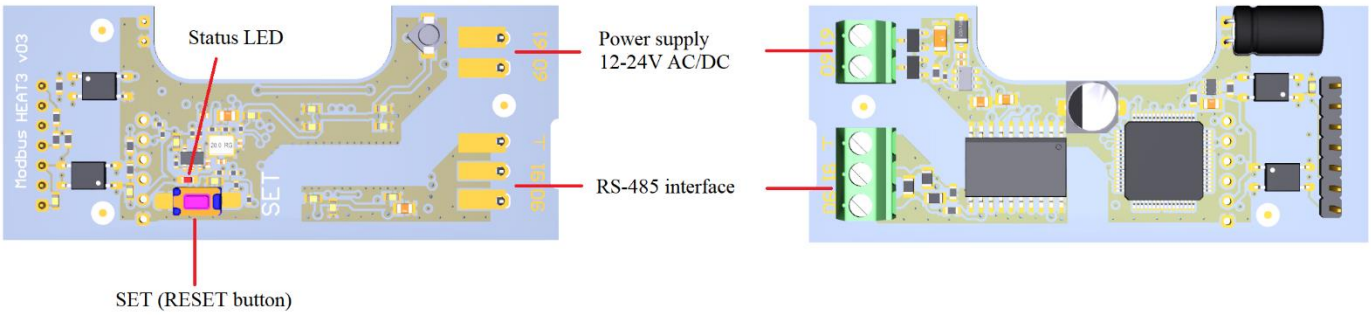

Polarity independent connection for SELV power supply	60 and 61 connectors
Voltage	12-24 V AC/DC
Max power consumption	2 W
Typical current supply	50 mA

Connectors	90 and 91 (GND optional, for serial communication)
Communication protocol	BACnet on MS/TP
Slave address	1 – 127 (MAC address – **according to meter's MBUS2 address**)
Baud rate	9600, 19200, 38400 (**default**), 57600, 76800, 115200
Data format	8E1 (8 data bits, Even parity, 1 stop bit) – **default**
Data update interval	300 sec (configurable)
Communication with energy meter	2400 baud rate, 8 data bits, Even parity, 1 stop bit (!not configurable)
Device link layer options	According to MS/TP Master / Slave
Is static device binding supported?	No
Character sets supported	ANSI X3.4
Standardized device profile	BACnet Application Specific Controller (B-ASC)

Status LED and SET button functionality:

Status LED is signalizing every BACnet MS/TP communication event. Status LED is blinking every time during communication request and even to response messages.
The RESET button is used when it is necessary to reset the module parameters after a failed configuration, forgotten address, baud rate, etc. In order to reset module, procedure is this:

- Turn off module from power supply (wait until module discharge)
- Press and hold RESET button. Then, turn on module power supply
- Wait until Status LED starts blinking frequently (after about 12 sec.)

BACnet Protocol Implementation Conformance Statement (PICS):

Date	2022-01-03
Vendor Name	Axioma Metering
Vendor ID	1006
Product Name	Axioma BACnet MS/TP base module
Application Software Version	2.1
Firmware Revision	0.8.3
BACnet Protocol Revision	9

List all BACnet Interoperability Building Blocks Supported

BIBB	Name	BACnet Service	Init	Exec
Data Sharing				
DS-RP-B	Read Property-B	ReadProperty		x
DS-RPM-B	Read Property Multiple-B	ReadPropertyMultiple		x
DS-WP-B	Write Property-B	WriteProperty		x
DS-WPM-B	Write Property Multiple-B	WritePropertyMultiple		x
Device Management				
DM-DDB-B	Dynamic Device Binding-B	Who-Is		x
		I-Am		x
DM-DOB-B	Dynamic Object Binding-B	Who-Has		x
		I-Have	x	
DM-DCC-B	Device Communication Control-B	DeviceCommunicationControl		x
DM-TS-B	Time Synchronization-B	TimeSynchronization		x
DM-UTC-B	UTC Time Synchronization-B	UTCTimeSynchronization		x
DM-RD-B	Reinitialize Device-B	ReinitializeDevice		x

Standard Object Types Supported:

Description	ID	Name	Used units	Read / Write
Device	Last 5 digits of serial number	Axioma BACnet	Dimensionless	Read
Analog Input	AI-0	Meter serial number	Dimensionless	Read
Analog Input	AI-1	Accumulated heat energy (E1)	kWh, MWh	Read
Analog Input	AI-2	Accumulated cooling energy (E2) / Energy 1	kWh, MWh	Read
Analog Input	AI-3	Tariff 1 / Energy 2	kWh, MWh	Read
Analog Input	AI-4	Tariff 2	kWh, MWh	Read
Analog Input	AI-5	Accumulated volume (V1)	l, m^3	Read
Analog Input	AI-6	Pulse input A accumulated / Accumulated volume (V2)	l, m^3, kWh, MWh	Read
Analog Input	AI-8	Pulse input B accumulated / Accumulated volume (V3)	l, m^3, kWh, MWh	Read
Analog Input	AI-11	Actual power	W, kW, MW	Read
Analog Input	AI-14	Actual flow	l/h, m^3/h	Read
Analog Input	AI-19	Flow temperature / Temperature 1	°C	Read
Analog Input	AI-20	Return temperature / Temperature 2	°C	Read
Analog Input	AI-21	Differential temperature	K	Read
Analog Input	AI-30	Info code (Error code)	Dimensionless	Read

Detailed Object Information (Device Object):

Property Identifier	Property Datatype	Conformance Code	Value
Object_Identifier	BACnetObjectIdentifier	W	Last 5 digits of serial number
Object_Name	CharacterString	W	“Axioma BACnet”
Object_Type	BACnetObjectType	R	Device
System_Status	BACnetDeviceStatus	R	OPERATIONAL
Vendor_Name	CharacterString	R	“Axioma Metering”
Vendor_Identifier	Unsigned16	R	“1006”
Firmware_Revision	CharacterString	R	“0.8.3”
Application_Software_Version	CharacterString	R	“2.1”
Description	CharacterString	O	"Axioma BACnet MS/TP base module"
Protocol_Version	Unsigned	R	1
Protocol_Revision	Unsigned	R	9
Protocol_Services_Supported	BACnetServicesSupported	R	{F, F, F, F, F, F, F, F, F, F, F, F, T, F, T, T, T, T, F, F, T, F, F, F, F, F, F, F, F, F, F, F, T, T, T, F, T, F, F, F} ReadProperty ReadPropertyMultiple WriteProperty WritePropertyMultiple DeviceCommunicationControl ReinitializeDevice TimeSynchronization

			Who-Has Who-Is UtcTimeSynchronization
Protocol_Object_Types_Supported	ProtocolObjectTypesSupported	R	{F, F, F, F, F, F, F, F, F, F, F, F, T, F, T, T, T, T, F, F, T, F, F, F, F, F, F, F, F, F, F, F, T, T, T, F, T, F, F, F} Analog_Input Device

Object_List	BACnetARRAY[N] of BACnetObjectIdentifier	R	{
			(Device, last 5 digits of serial number)
			(Analog-Input, 0),
			(Analog-Input, 1),
			(Analog-Input, 2),
			(Analog-Input, 3),
			(Analog-Input, 4),
			(Analog-Input, 5),
			(Analog-Input, 6),
			(Analog-Input, 7),
			(Analog-Input, 8),
			(Analog-Input, 9),
			(Analog-Input, 10),
			(Analog-Input, 11),
			}

Max_APDU_Length_Accepted	Unsigned	R	206
Segmentation_Supported	BACnetSegmentation	R	no-segmentation
APDU_Timeout	Unsigned	R	3000
Number_Of_APDU_Retries	Unsigned	R	3
Max_Master	Unsigned (1…127)	W	127
Max_Info_Frames	Unsigned	W	2
Database_Revision	Unsigned	R	0

Analog-Input Object:

Property Identifier	Property Datatype	Conformance Code	Value
Object_Identifier	BACnetObjectIdentifier	R	(Analog-Input, 0-11)
Object_Name	CharacterString	R	See standard object table above
Object_Type	BACnetObjectType	R	Analog-Input
Present_Value	REAL	R (W)	-

Status_Flags	BACnetStatusFlags	R	{
			IN_ALARM,
			FAULT,
			OVERRIDDEN,
			OUT_OF_SERVICE
			}

Event_State	BACnetEventState	R	NORMAL
Out_Of_Service	BOOLEAN	R (W)	TRUE or FALSE
Unit	BACnetEngineeringUnits	R	See standard object table above