Instrumentteam PLUSS as
post@instrumentteampluss.no

Electromagnetic Flowmeter

User's Manual (Version 06)

CONTENT

ELECTROMAGNETIC FLOWMETER CONTENTS

I. Introduction.....1
1.1. Magnetic Flowmeter Introduction..... 1
1.2. Features:..... 1
1.3. Technical Data:..... 2
1.4. Overall Dimension:..... 3
II. Installation Note..... 5
2.1 Choose the Installation Place..... 5
2.2. Installation Requirements..... 5
2.3 Instrument Wiring..... 8
2.4 Sensor Grounding.....8

ELECTROMAGNETIC FLOWMETER CONVERTER CONTENTS

1 The Product Function Introduction.....9
1.1 Basic Function.....9
1.2 Especial Function..... 10
1.3 Normal Operation Conditions.....10
1.4 Converter Type.....10
1.5 Converter Dimension..... 10
2. Converter Technical Performance..... 11
2.1 Simulated Current Output..... 11
2.2 Digital Frequency Output.....11
2.3 Digital Pulse Output..... 11
2.4 Alarm Output.....11
2.5 Digital Communication Port and Protocol..... 11
2.6 Electric Isolate.....11

3. Operation Converter.....12
3.1 Key and Display.....12
3.2 Wiring.....13
3.3 Characteristic and Connection of Cable.....15
4. Setting Parameters.....23
4.1 Parameters and Setting.....23
4.2 Function Keys for Setting Parameters.....25
4.3 Details Parameters.....31
5. Infrared Telecontrol Function Keys.....38
6. Alarm Information.....39
7. Trouble Shooting.....39
Appendix One ON/OFF Switch Diagram.....41
Appendix Two: HART Function Explanation.....42
Appendix Three: Flow Coefficient Modification Records.....43
Appendix Four: Lightning Protection Notes.....44
Appendix Five.....45

I. Introduction

1.1. Magnetic Flowmeter Introduction

Electromagnetic flow meter is a velocity flow measurement device which measures volume flow of conductive liquids. It not only has on site display, but also can output standard current signals for recording, adjustment and control, to realize automatic detection and long-distance signal transmission. It can measure the flow of liquids, pastes, and slurries in water, wastewater, chemical, fertilizer, dairy, food, beverage, pharmaceutical, medical, petrochemical, iron, steel, paper, mining, and agricultural industries etc. The structure of the instrument has integral type and remote type.

1.2. Features:

- There are no moving parts in measuring tube, so it is convenient for maintenance. No flow-blocking parts, so it has quite low pressure loss.
- The lowest conductivity of the tested liquid is ≥20μs/cm, with various lining materials, it can be used to measure the flow of various acids, alkalis, salt solutions, slurry, mineral pulp and paper pulp etc.
- The performance of the instrument is not affected by the properties of the material such as corrosiveness, viscosity, pressure, density, acidity, and alkalinity. The induction voltage signal of sensor has a linear relationship with the average flow rate, which ensure high accuracy.
- With Low-frequency rectangular wave excitation, it is not affected by the power frequency and various interferences on site, so that to ensure stable and reliable measuring.
- Not affected by the direction of the fluid, both positive and negative flow can be accurately measured.
- With LCD backlit display, parameters can be modified on site conveniently.

With empty pipe detection/alarm function, the unit can detect if the pipe is full or drained /empty.

1.3. Technical Data:

Diameter range	DN3～DN3000
Medium conductivity	> 20 μs/cm
Liner material	Polyurethane, Neoprene Rubber, Hard Rubber, PTFE, FEP, PFA,Ceramic
Electrode material	SUS316L, Hastelloy B, Hastelloy C, Titanium, Tantalum, Platinum-iridium alloy
Ambient temperature	-20°C~60°C
Converter working environment humidity	≦95%
Protection grade	IP65, IP68 (Optional)
Measurement range of velocity	0~15 m/s
Accuracy	±0.5%; ± 0.2%
Measurement parameters	Instantaneous flow, velocity, positive and negative accumulative flow
Detection & alarm function	Fluid empty pipe detection, excitation alarm, upper and lower limit alarm, system alarm
Network function	HART, MODBUS, GPRS, PROFIBUS (optional)
Power supply	AC power supply, voltage applicable range: 85VAC-250VAC
	DC power supply, voltage applicable range: 20VDC-36VDC

1.4. Overall Dimension:

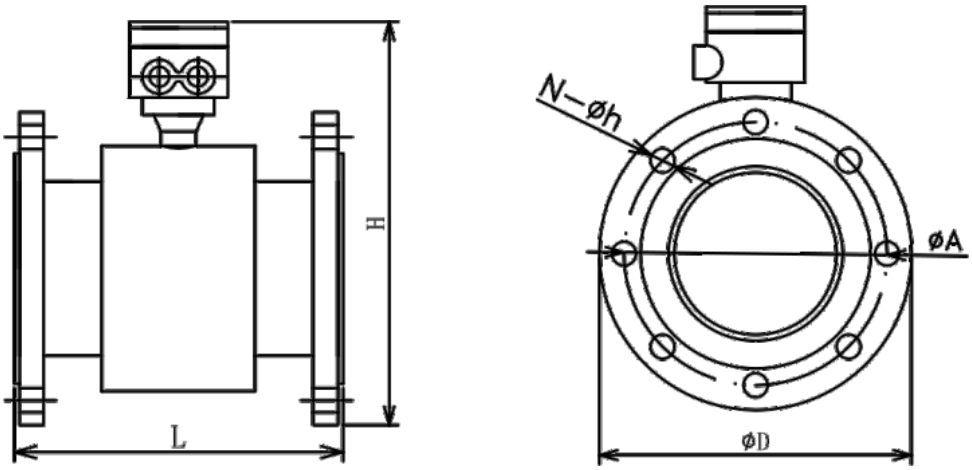

Remote Mag Flow Meter Size						
Size	Nominal Pressure	L	φD	φA	H	N-φh
15	PN16	200	95	65	220	4-φ14
20		200	105	75	220	4-φ14
25		200	115	85	223	4-φ14
32		200	140	100	240	4-φ18
40		200	150	110.	250	4-φ18
50		200	165	125	263	4-φ18
65		200	185	145	283	4-φ18
80		200	200	1 60	290	8-φ18
100		250	220	180	310	8-φ18
125		250	250	210	340	8-φ18
150		300	285	240	373	8-φ22
200		350	340	295	430	12-φ22
250		450	405	355	495	12-φ26
300	PN10	500	445	400	540	12-φ22
350		550	505	460	595	16-φ22
400		600	565	515	658	16-φ26
450		600	615	565	708	20-φ26
500		600	670	620	760	20-φ26
600		600	780	725	882	20-φ30
700		700	895	840	982	24-φ30
800		800	1015	950	1092	24-φ33
900		900	1115	1050	1192	28-φ33
1000		1000	1230	1160	1299	28-φ36
1200	PN6	1200	1405	1340	1488	32-φ33

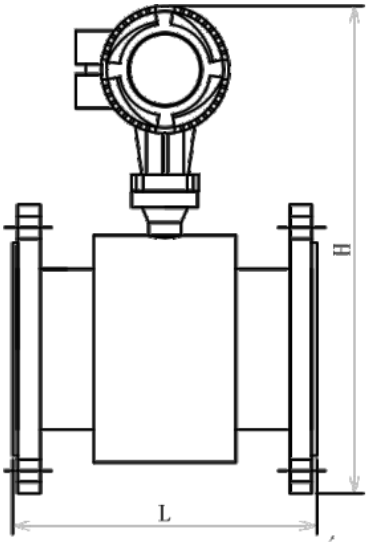

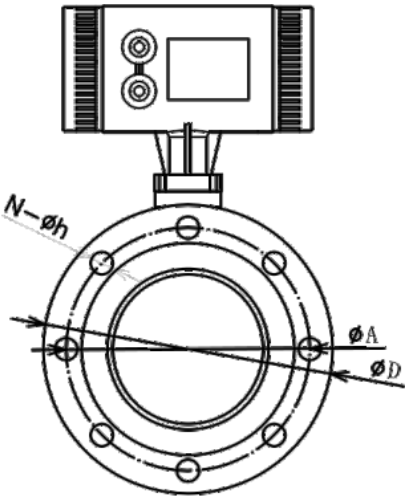

Compact Mag Flow Meter Size						
Size	Nominal Pressure	L	φD	φA	H	N-φh
15	PN16	200	95	65	332	4-φ14
20		200	105	75	332	4-φ14
25		200	115	85	335	4-φ14
32		200	140	100	352	4-φ18
40		200	150	110.	362	4-φ18
50		200	165	125	375	4-φ18
65		200	185	145	395	4-φ18
80		200	200	1 60	402	8-φ18
100		250	220	180	422	8-φ18
125		250	250	210	452	8-φ18
150		300	285	240	485	8-φ22
200		350	340	295	542	12-φ22
250		450	405	355	607	12-φ26
300	PN10	500	445	400	652	12-φ22
350		550	505	460	707	16-φ22
400		600	565	515	770	16-φ26
450		600	615	565	820	20-φ26
500		600	670	620	872	20-φ26
600		600	780	725	994	20-φ30
700		700	895	840	1094	24-φ30
800		800	1015	950	1204	24-φ33
900		900	1115	1050	1304	28-φ33
1000		1000	1230	1160	1411	28-φ36
1200	PN6	1200	1405	1340	1600	32-φ33

(Note:The dimensions in above table is based on DIN standard flange; For other standards, please check with us.).

II. Installation Note

2.1 Choose the Installation Place

To ensure the stable and reliable performance of the sensor, please pay attention to the following requirements when choosing the installation location:
(1) Keep away from equipment with a strong magnetic field as far as possible, such as large motors, large transformers, frequency conversion equipment etc.
(2) Please better install in a dry and ventilated place, not a humid place.
(3) Direct sun exposure or direct raining is better to be avoided. The environment temperature should be not more than 60 °C and relative humidity not more than 95%.
(4) Choose a place where is convenient for operation and maintenance.
(5) To avoid negative pressure, the flow sensor should not be installed at the pump inlet, but at the pump outlet. Valves should always be mounted on the downstream side of the flow sensor.

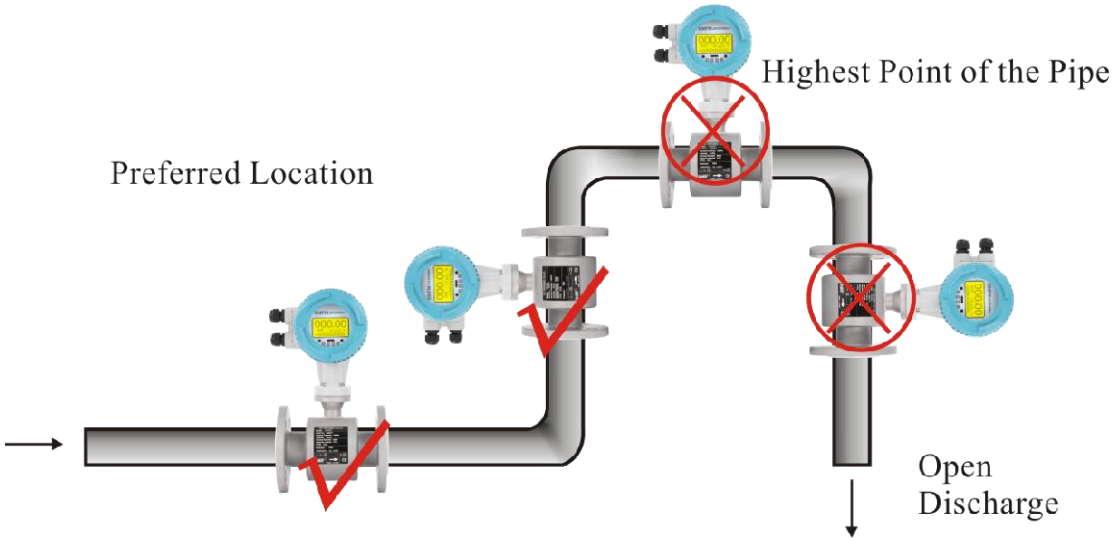

2.2. Installation Requirements

In order to ensure correct measuring, please pay attention to the following requirements when choosing the line position:
(1) The flow sensor can be mounted vertically or horizontally. If the flow sensor is mounted vertically, the flow direction should always be upwards.
(2) The medium should always be full-filled in pipe at the installation location to avoid not full filled pipes and gas adhering to the electrode.
(3) For liquid-solid two-phase flow, it's better to choose perpendicular installation to make liner of sensor attrition uniform and prolong working life.
(4) When sensor is not fully filled, it can raise end pipeline of flow meter and makes its full tube.
(5) Diameter-Varing: When flow rate is too large or too small, we should use this installation method change diameter to meet flow rate requirements. Straight pipe upstream ≥10DN, straight pipe downstream ≥5DN(DN means pipe diameter)
(6) The front and rear straight pipes are ≥10DN at the front of the flowmeter and ≥5DN at the back.

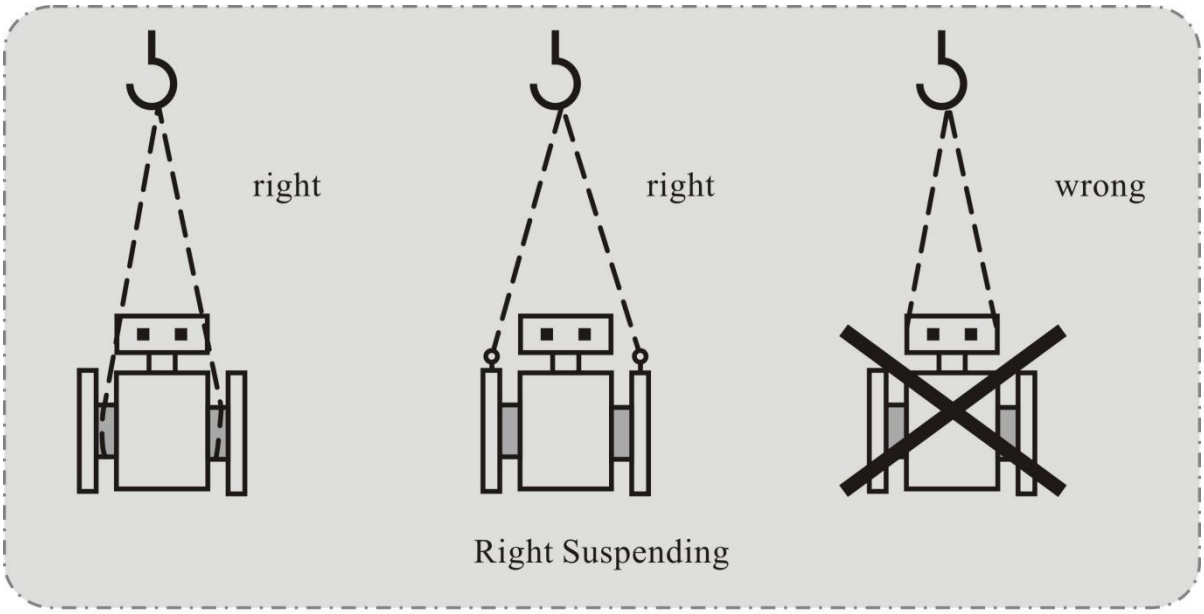

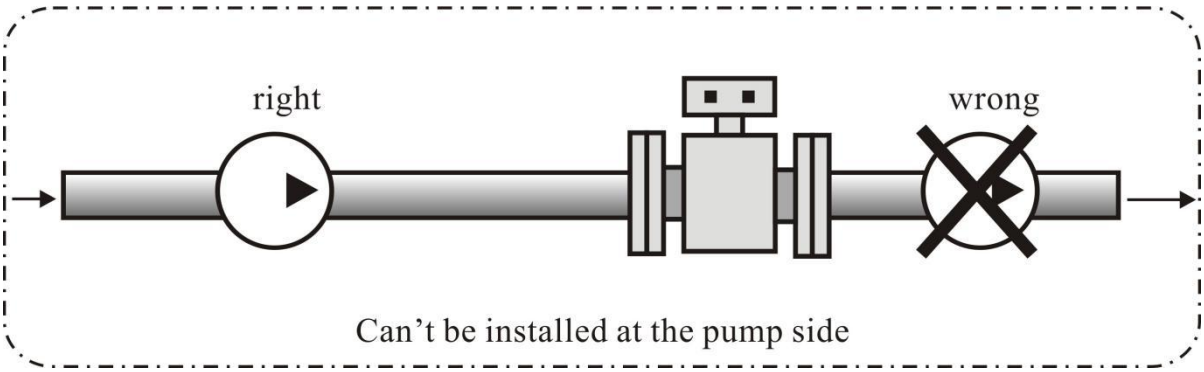

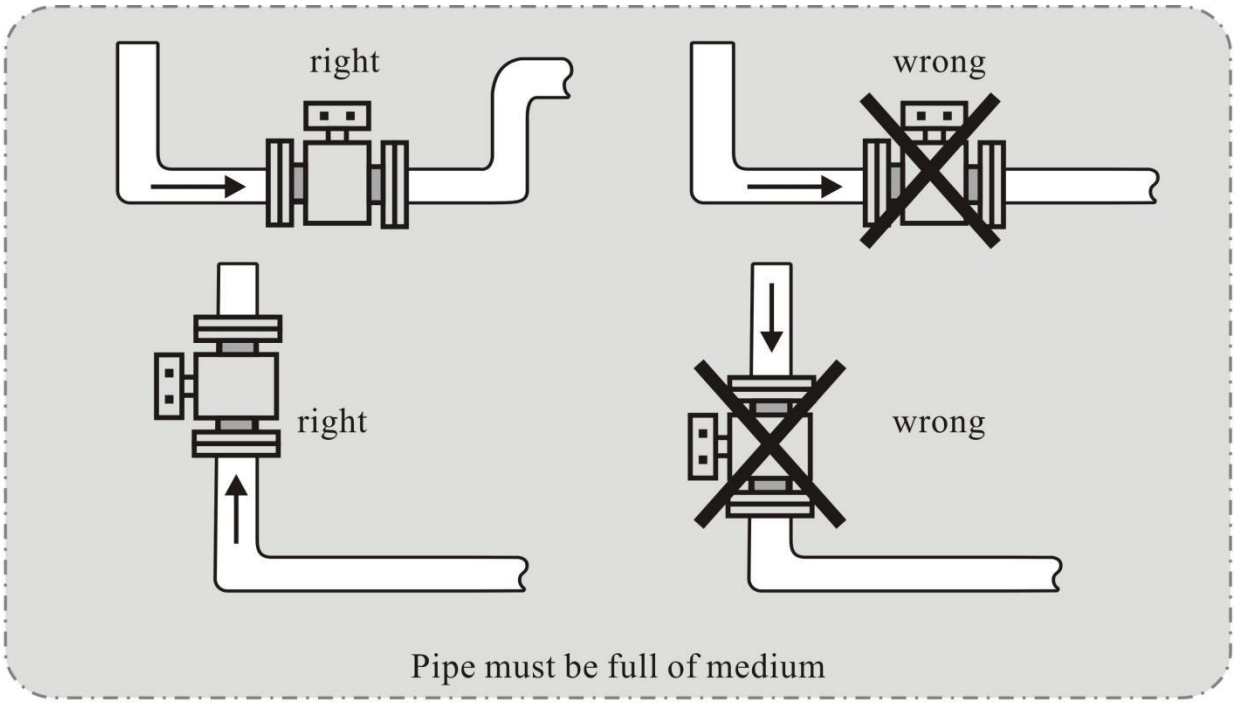
right
wrong
right
wrong
Pipe must be full of medium

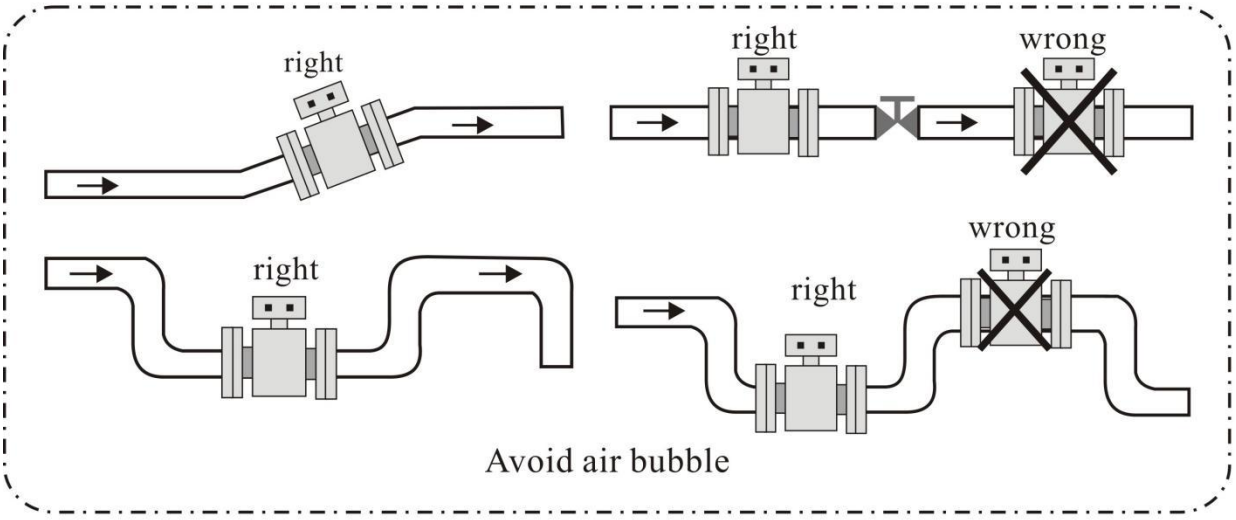
right
right
wrong
right
wrong
right
Avoid air bubble

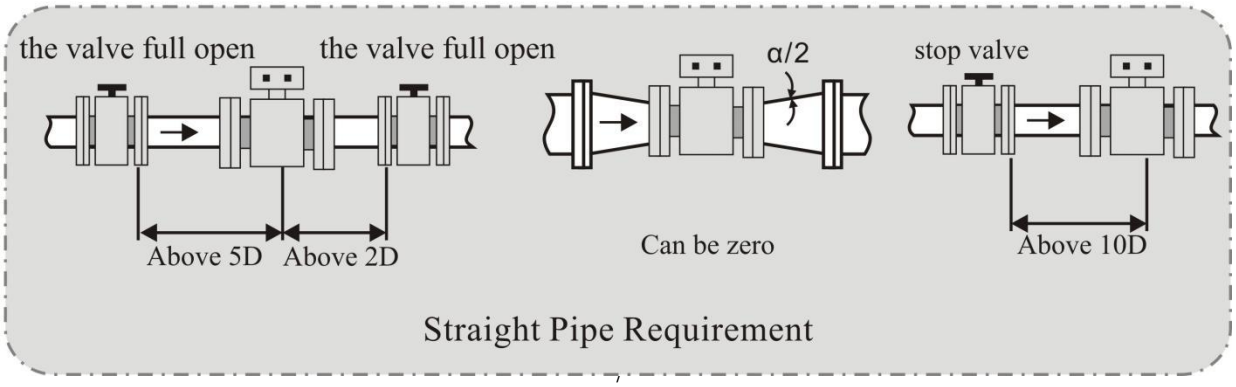
the valve full open
the valve full open
α/2
stop valve
Above 5D
Above 2D
Can be zero
Above 10D
Straight Pipe Requirement

2.3 Instrument Wiring

●The remote type signal cable should use a customized dedicated cable, the shorter the cable, the better.

●A Yz medium-sized rubber sheathed cable is optional for the excitation cable, and its length is the same as that of the signal cable.

●Signal cables must be strictly separated from other power sources and cannot be laid in the same pipe.

●The signal cable and excitation cable should be as short as possible, and the excess cables should not be rolled together. The excess cables should be cut off and the joints should be re-welded.

●When the cable is connected to the electrical interface of the sensor, insert a U-shape at the port to prevent rainwater from penetrating into the sensor.

2.4 Sensor Grounding

Danger!

Electric potential difference is not allowed between measuring sensor and shells or converter protection grounding.Electromagnetic flow meter must be ground connection separately before using， if grounding together with other instruments or electrical devices, the leakage current in ground wire may will produce series mode interference to the measurement signal , it could cause electromagnetic flow meter can not work.

① Measurement sensors must be properly grounded;

② Earthing wire should not transmit any interference voltage;

③ Grounding wires are not allowed to connect to other electrical equipments at the same time.

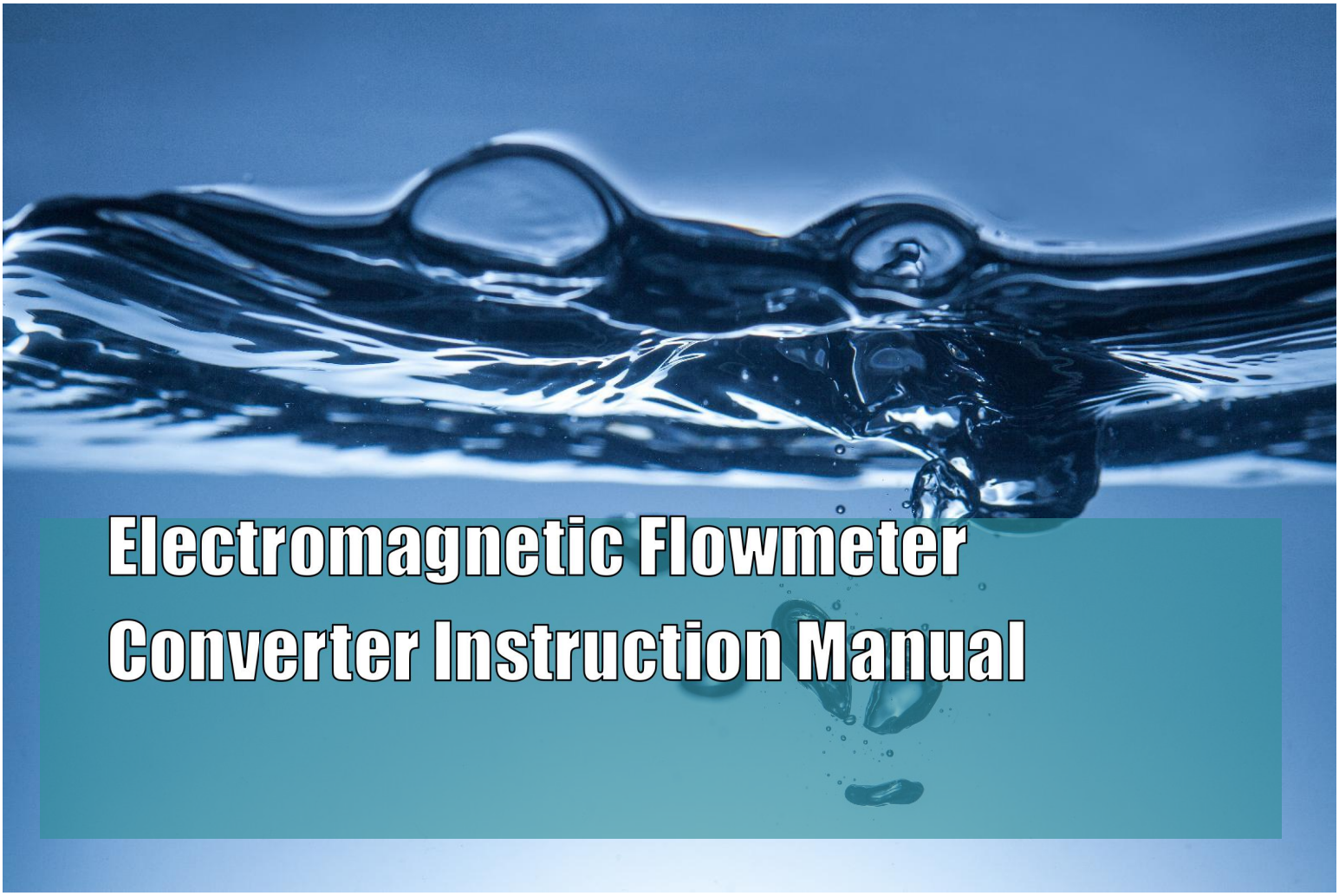

1 The Product Function Introduction

1.1 Basic Function

■ Low-frequency square-wave exciting，exciting frequency: 1/16 power frequency, 1/20 power frequency, 1/25 power frequency;
■ High-frequency square-wave exciting, exciting frequency: ½ power frequency for slurry measurement;
■ No need to add empty pipeline measurement, and can measure continuously, alarm by fixed value;
■ Flow rate range: 0.1 --- 15m/s, Flow rate resolution: 0.5mm/s;
■ AC high-frequency switching power, range of voltage: 85VAC --- 250VAC;
■ DC 24V switching power，range of voltage: 20VDC --- 36VDC;
■ Network function: MODBUS, GPRS, PROFIBUS, HART communication interface (optional);
■ English displaying mode (other languages can be custom made);
■ Three integrator gross inside, respective register: forward gross, reverse gross

and difference between the forward total and reverse total.

1.2 Especial Function

■ Power cut off time recording function, automatically records the power interruption time of the instrument system, and compensates for the missing flow;
■ Hourly total recording function, record the total flow volume in hours, suitable for time-sharing measurement system;
■ Infrared handheld operation keyboard, remote non-contact operation of all functions of the converter;

1.3 Normal Operation Conditions

Ambient Temperature Ranges	-10°C ~ +60°C
Relative Humidity	5%～90%
Power Supply	85VAC～250VAC，45～63Hz (single-phase AC)
Dissipation Power	<20W(after connecting sensor)

1.4 Converter Type

● Compact type: circular housing connect with the throat plate of sensor directly
● Remote type: square housing (wall mounted type) connect with the cable of sensor

1.5 Converter Dimension

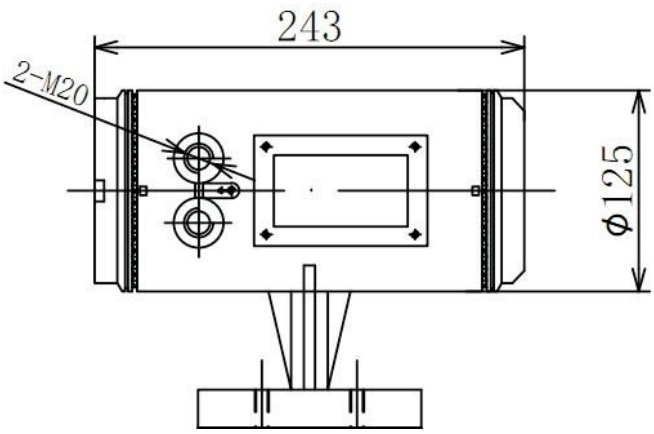

Pic.1 Compact circular type converter dimension

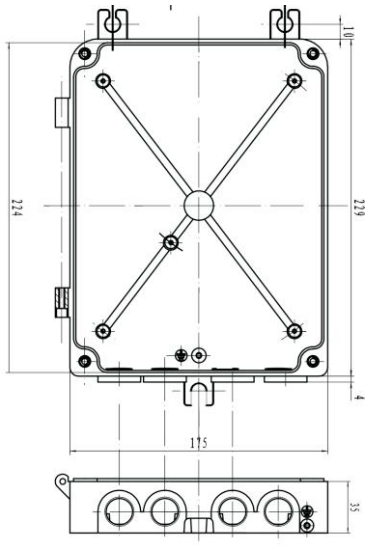

Pic.2 Remote square type converter dimension

2. Converter Technical Performance

2.1 Simulated Current Output

Load resistor: 0~1.5kΩ (0~10mA); 0~750Ω (4~20mA).
Basic Errors: 0.1%±10μA.

2.2 Digital Frequency Output

Frequency output range: 1～5000Hz.
Output electric isolate: Photoelectric isolate. Isolate voltage: > 1000VDC.
Frequency output drive: output by field-effect transistors, the highest subjected voltage is 36VDC, maximum of output current is 250 mA.

2.3 Digital Pulse Output

Pulse output range: 0 ～ 100 pulse/s. (When higher than upper limit, pulse will lose);
Pulse output value: 0.001～1.000 m3 / cp 0.001～1.000 Ltr / cp;
Pulse output width: 50ms;
Pulse output isolate: photo electricity isolate. Isolate voltage: > 1000VDC;
Pulse output drive: output by field-effect transistors, the highest subjected voltage is 36VDC, maximum of output current is 250 mA.

2.4 Alarm Output

Alarm output junction: ALMH--- upper limit; ALML--- lower limit;
Output isolate: photo electricity isolate. Isolate voltage: > 1000VDC;
Alarm output drive: output by Darlington pipe, the highest subjected voltage is 36VDC，maximum of output current is 250 mA.

2.5 Digital Communication Port and Protocol

MODBUS interface: format of RTU.
HART interface: support standard HART protocol.

2.6 Electric Isolate

Insulated voltage between simulated input and simulated output should be higher than 500V;
Insulated voltage between simulated input and alarm power supply should be higher than 500V;
Insulated voltage between simulated input and AC power supply should be higher than 500V;
Insulated voltage between simulated output and AC power supply should be higher than 500V;
Insulated voltage between simulated output and earth should be higher than 500V;
Insulated voltage between pulse output and AC power supply should be higher than 500V;
Insulated voltage between pulse output and earth should be higher than 500V;

Insulated voltage between alarm output and AC power supply should be higher than 500V;
Insulated voltage between alarm output and earth should be higher than 500V;

3. Operation Converter

3.1 Key and Display

Squared define keys and LCD screen display

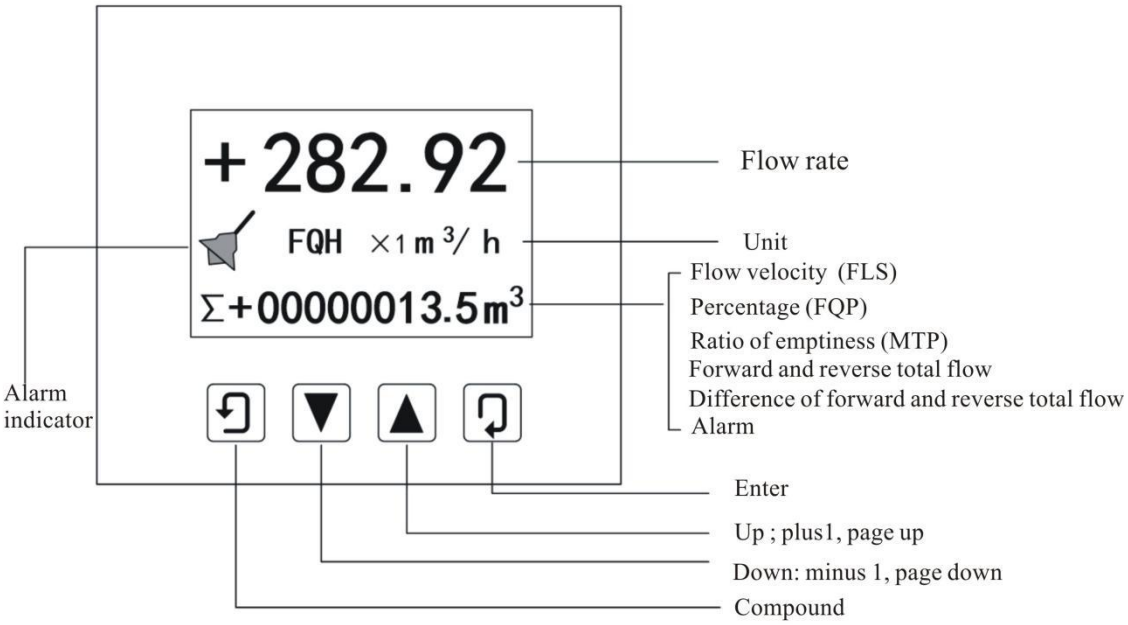

Pic.3.1(a) Remote type LCD display

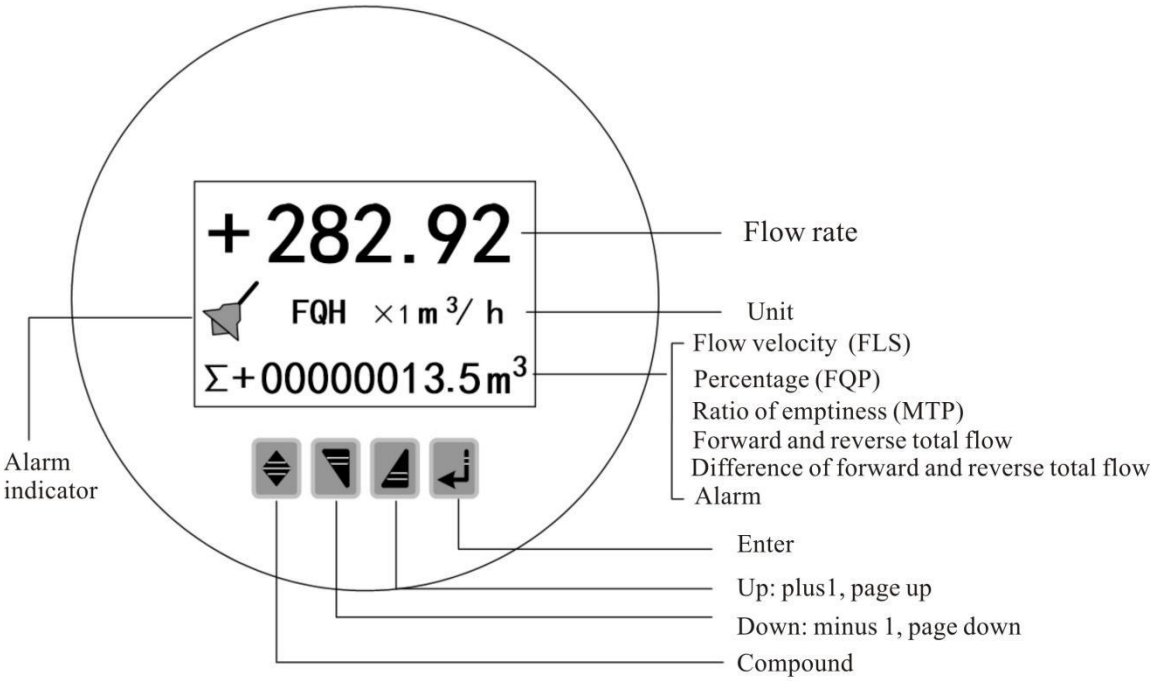

Pic.3.1(b) Compact type LCD display

Note: When measuring, pushing down “Compound Key + Enter” will appear password of changing state, base on distinction of secrecy, and change the password as we provide. Then pushing “Compound Key + Enter” again, and you can inter the state of setting parameter. If want to return to the running state, push “Enter” for several seconds.

Pic.3.1 (c) Remote type

Pic.3.1 (d) Compact Type

3.2 Wiring

3.2.1 Remote Type Wiring Instruction

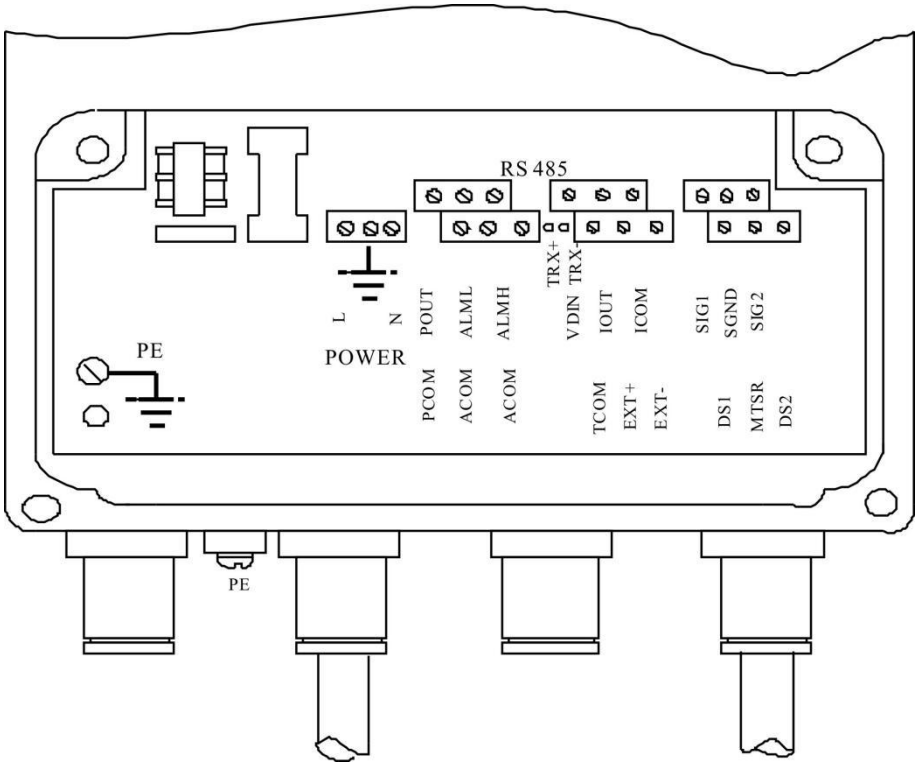

Pic 3.2(a) Wiring for remote square type

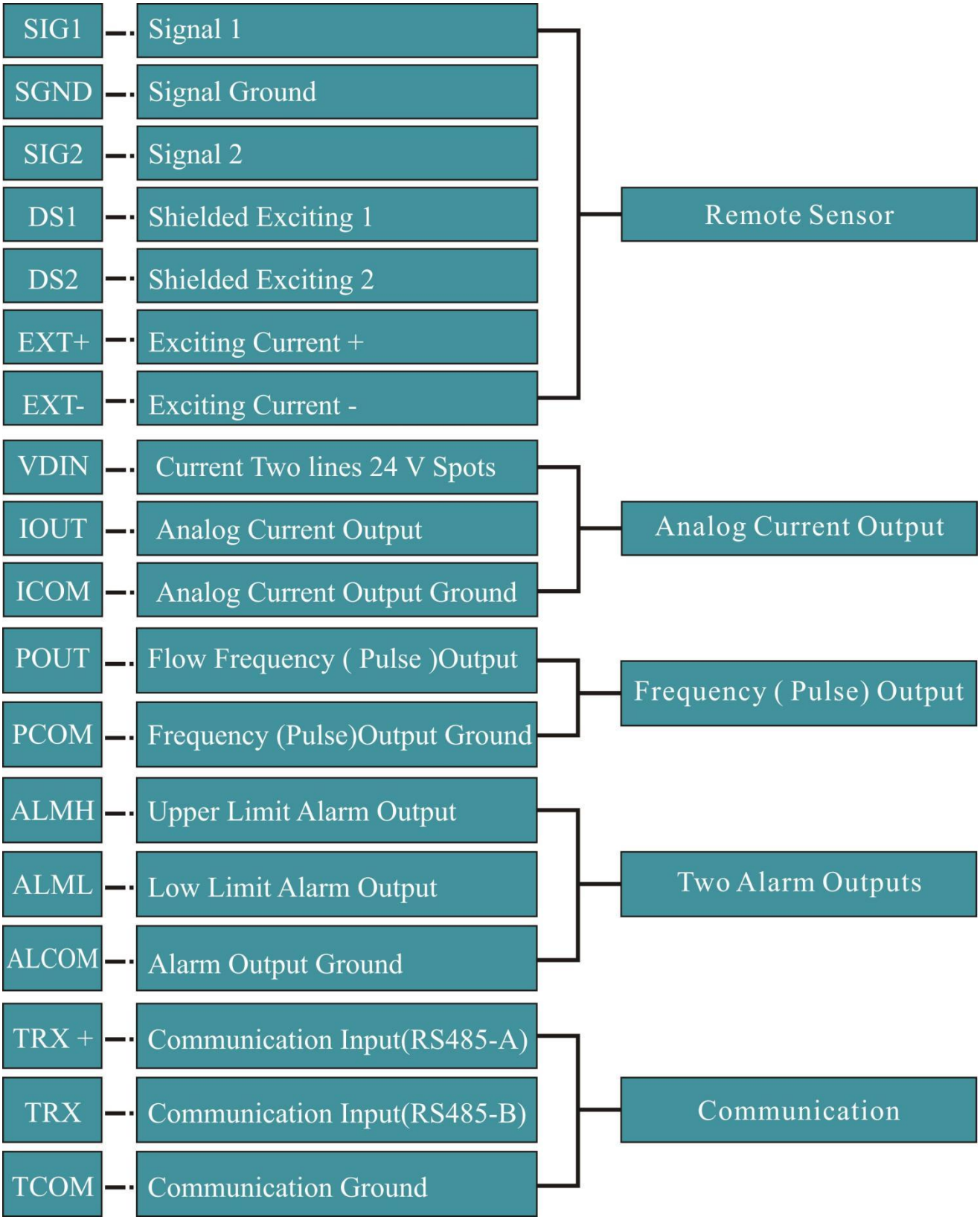
SIG1
Signal 1
SGND
Signal Ground
SIG2
Signal 2
DS1
Shielded Exciting 1
DS2
Shielded Exciting 2
EXT+
Exciting Current +
EXT-
Exciting Current -
Remote Sensor
VDIN
Current Two lines 24 V Spots
IOUT
Analog Current Output
ICOM
Analog Current Output Ground
Analog Current Output
POUT
Flow Frequency (Pulse)Output
PCOM
Frequency (Pulse)Output Ground
Frequency (Pulse) Output
ALMH
Upper Limit Alarm Output
ALML
Low Limit Alarm Output
ALCOM
Alarm Output Ground
Two Alarm Outputs
TRX +
Communication Input(RS485-A)
TRX
Communication Input(RS485-B)
TCOM
Communication Ground
Communication

3.2.2 Compact Type Wiring Instruction

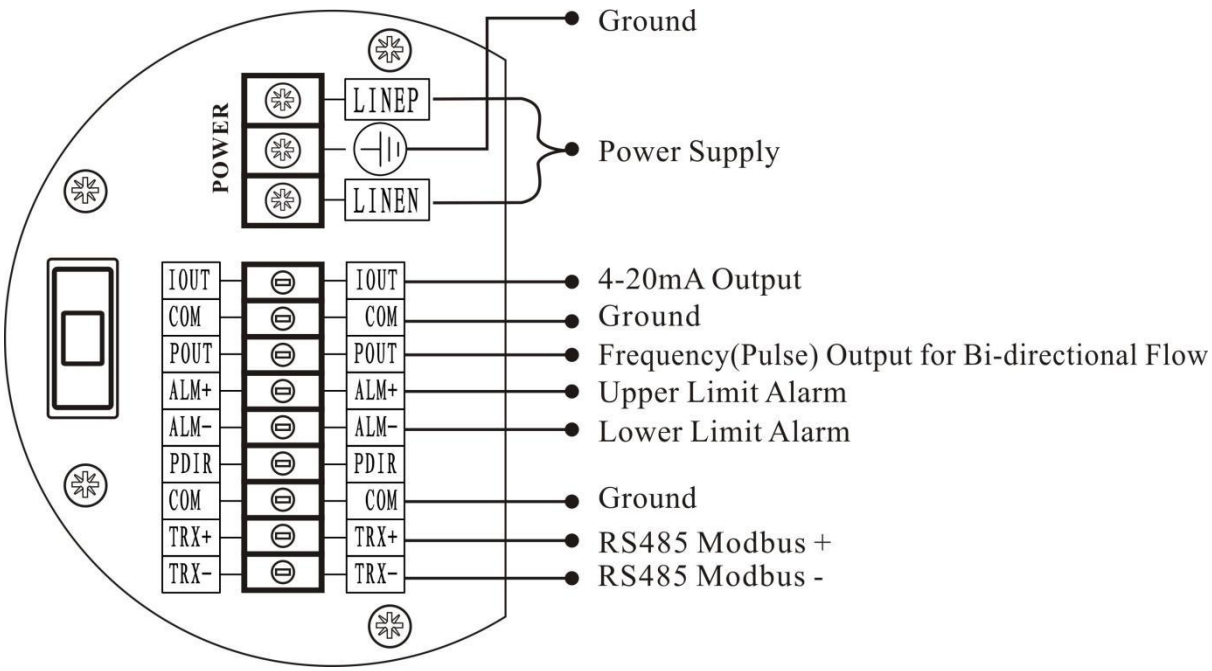

Pic 3.2(b) Wiring for compact circular type

3.3 Characteristic and Connection of Cable

3.3.1 Flux Signal Line

When separated models of converters are assembled with sensors for measuring flow of fluid which conductivity is larger than 50μS/cm, PVVP 2*0.2 mm2 model cable (metal shielded signal cable covered with PVC) can be used as communication cable for flow signals. The length of signal cable should be less than 100 m. Signal cables have to be connected to sensors that were assembled by producers. Connections of signal cables are shown in Pic.4.3(b) for squire-shaped models and Pic.4.3(d) for circle-shaped models, respectively.

The converter can output equivalent level of shielded exciting signal voltage so that interference to flow measurement signals can reduced by means of lowering the distributed capacitance of communication cable. When measured conductivity is less than 50μS/cm or signals are transferred in remote distances, double-conductor and double-shielded signal cable at equivalent level of voltage can be used. For example, special STT3200 cable or BTS model signal cable (triple-shielded) can be used for signal communication.

3.3.2 Exciting Current Cable

Two conductor and insulating rubber- covered cables can be used as exciting

current cables. Suggested model is RVVP2*0.3mm2 . Length of exciting current cable should be equal to that of signal cable. When the model STT3200 cables are used for exciting current and signals, two cables can be put together as one cable.

3.3.3 Output and Power Line

All cables for signals transferring and power supply has to be prepared by users. However, it should be careful to choose the cables that meet the upper limit load of consuming current.

Note: When DIP switch next to terminal is set to ON places, the converter from its inside can provide +28Vpower supply and up-pull 10kΩ resistance to output Frequencies (PUL) to isolated OC gate, Alarm Output (ALMH.ALML), and Status Control（INSW）.Therefore, when converter has frequency output and works with sensor together, DIP switch can be set as ON getting frequency signals from POUT and PCOM terminals.

Pulse current output, alarm current output and external power supply can be seen in Pic.3.3 (a). When inductive load is connected to converter, diode should be used as in Pic.3.3 (b).

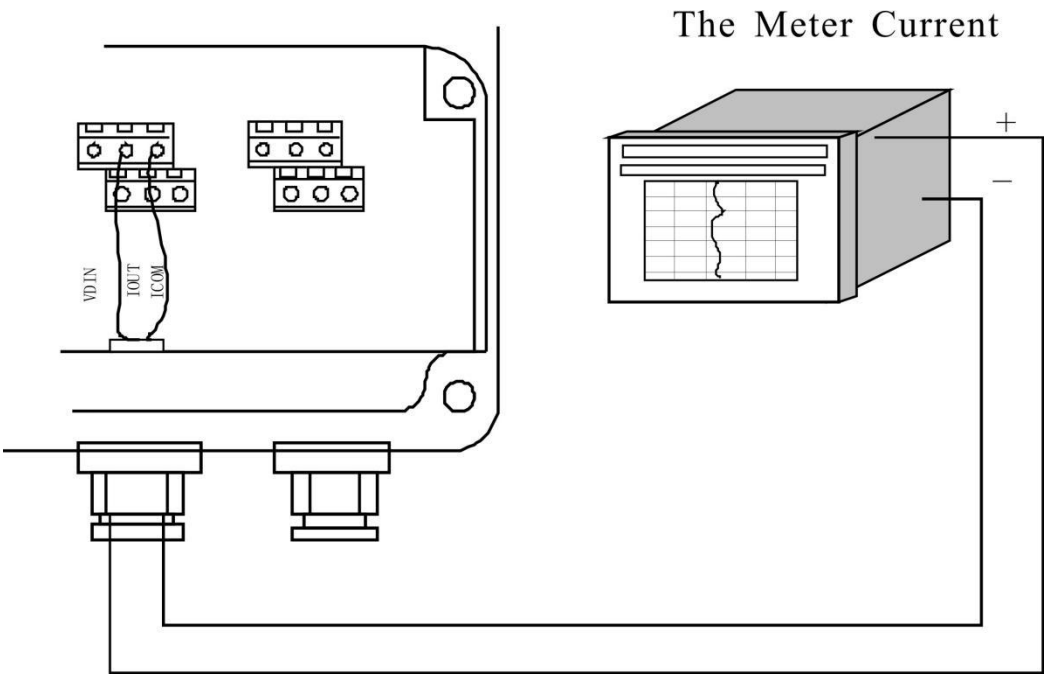

Pic.3.3 (a) Output current circuit

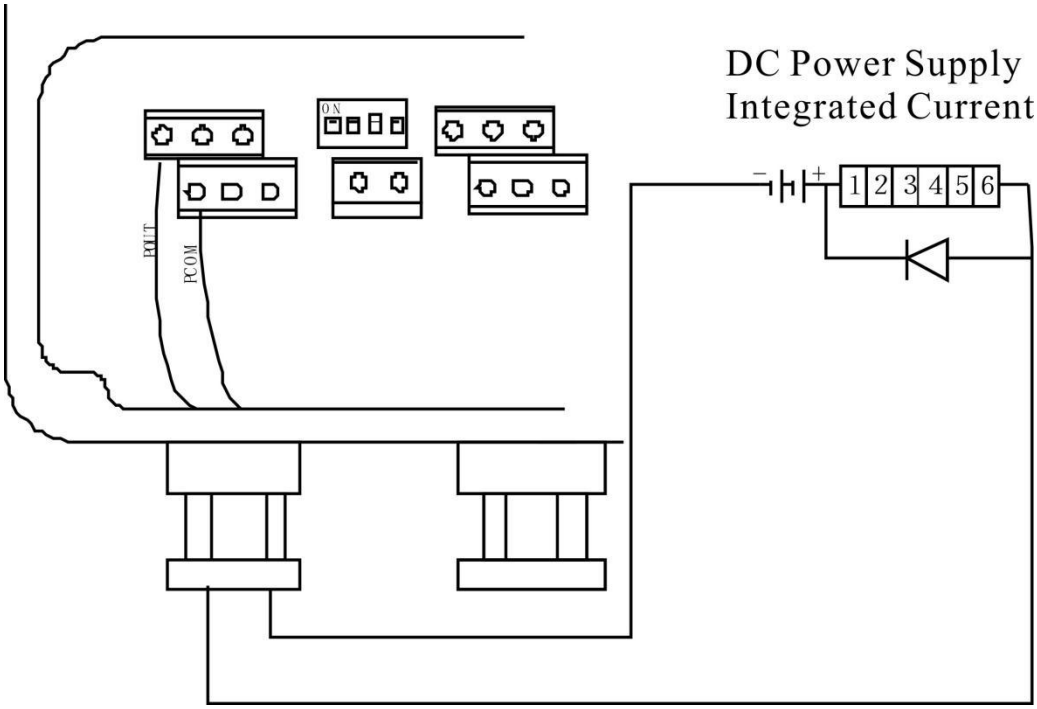

Pic.3.3 (b) Connection of electro-magnet counter

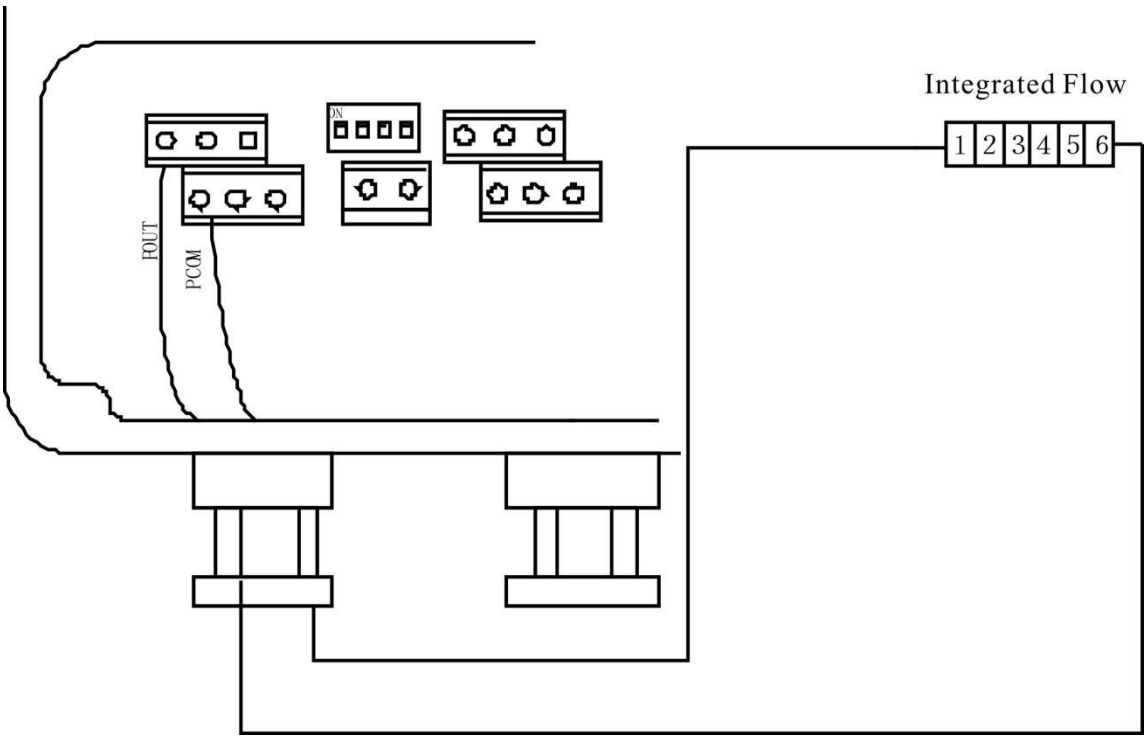

Pic.3.3 (c) Connection of electronic counter

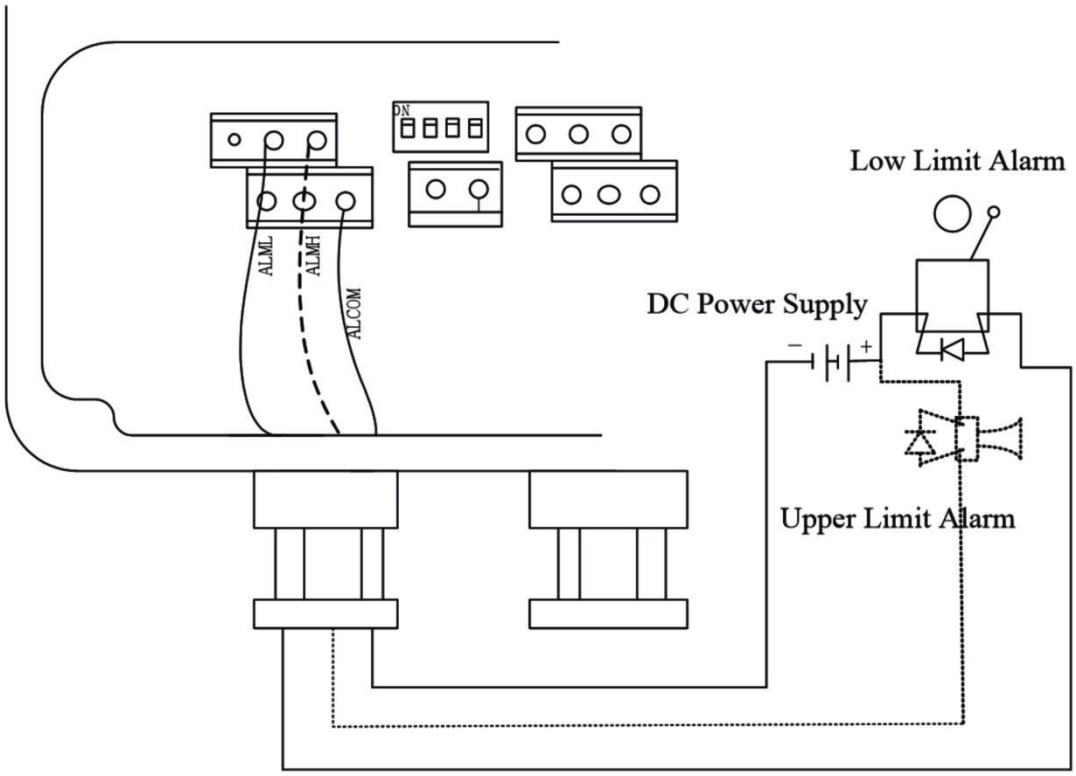

Pic.3.3 (d) Connection of alarm output

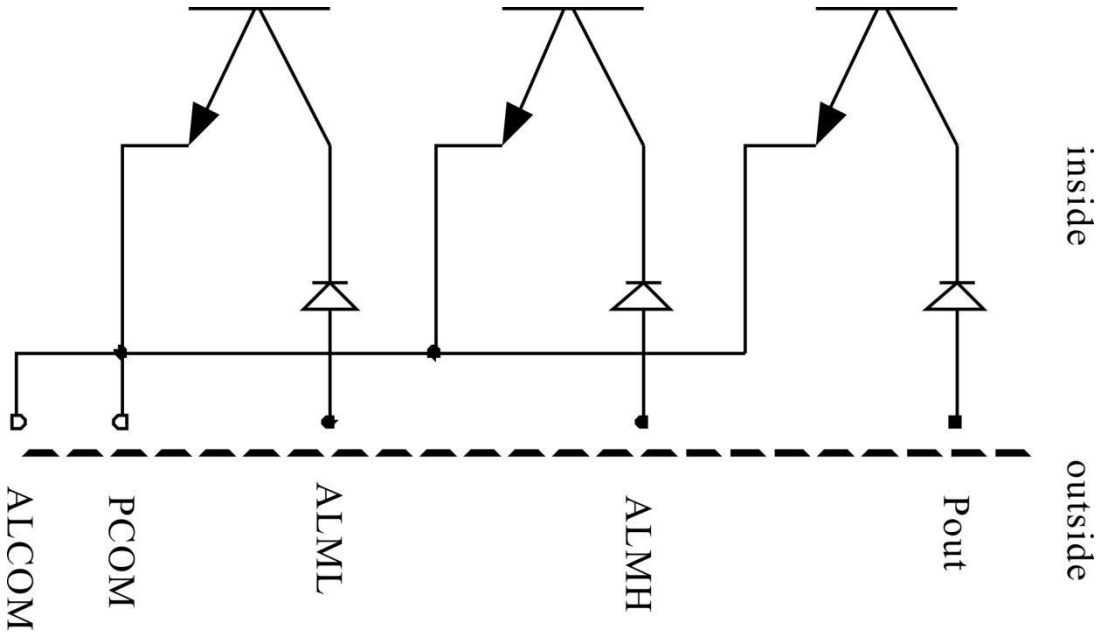

Pic.3.3（e）Connection of OC gate

3.3.4 Grounding

Contact area of copper Connector PE on Converter Cabinet for grounding should be larger than 1.6mm2.Contact resistance should be less than 10Ω.

3.3.5 Digital Output and Calculate

Digital output means frequency output and pulse output, and both of them use the same output point, so user can choose only one type of them but not both.

3.3.5.1 Frequency Output

Frequency output range is 0～5000HZ, and corresponding the percent of flux.

$$F=\frac{\text{Measure value}}{\text{Full scale value}}\bullet\text{frequency range}$$

The upper limit of frequency output can be adjusted. It can be chosen from 0 ~ 5000HZ, and also can be chosen low frequency: such as 0 ~ 1000HZ or 0 ~ 5000HZ.

Frequency output mode general can be used in control application, because it responses the percent flux. Users can choose pulse output when the equipment is applied to count.

3.3.5.2 Pulse Output Mode:

Pulse output mainly applies in count mode. A pulse output delegates a unit flux, such as 1L or 1M3 etc. Pulse output unit divide into 0.001L, 0.01L, 0.1L, 1L, 0.001M3, 0.01M3, 0.1M3, 1 M3 .When users choose the pulse unit, they should notice the match of the flux range of flow meter and pulse unit. For volume flux, count formula as follows:

$Q_L=0.0007854\times D^2\times V$ (L/S)

O_R $Q_M=0.0007854\times D^2\times V\times 10^{-3}$ (M^3/S)

Note: D-nozzle (mm)

V-velocity of flow (m/s)

The setting of pulse unit should match flow rate in working site. If the flow rate is large but the pulse unit setting is small, the number of pulse outputs will exceed the limit. Generally, pulse output should be controlled below 3000 Pulse/Second. Conversely, if the flow rate is small but the pulse unit is set too large, it will take too long time to generate a pulse.

Meanwhile, pulse output is different from frequency output. One pulse output is stand for the value of flow volume for pulse unit. equal to the value of one pulse unit. Generally, measure pulse output should use count instrument, but not frequent instrument.

3.3.5.3 The Connection of Digital Output

Digital output have two connected points: digital output connected point, digital ground point, and symbol as follows:

POUT ----- digital output point;

PCOM ----- digital ground point;

POUT is collector plough output; user may refer to next circuit to connect

3.3.5.4 The Connection of Digital Voltage Output

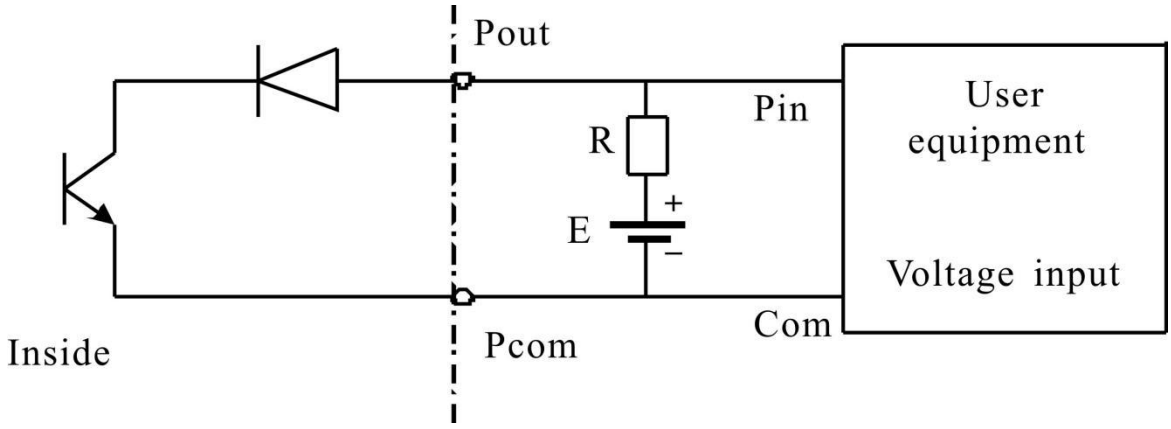

Pic.3.4 (a) The connection of digital voltage output

3.3.5.5 Digital Output Connect Electricity Coupling (PLC etc.)

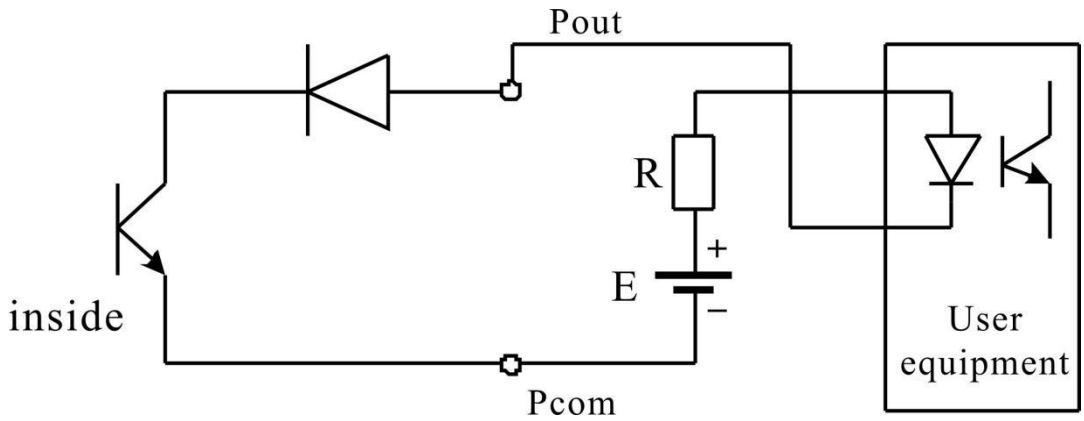

Pic.3.4 (b) Digital output connect to electricity coupling

Commonly user's electricity coupling current is about 10mA, so E/R=10mA, E=5～24V.

3.3.5.6 Digital Output Connect Relay

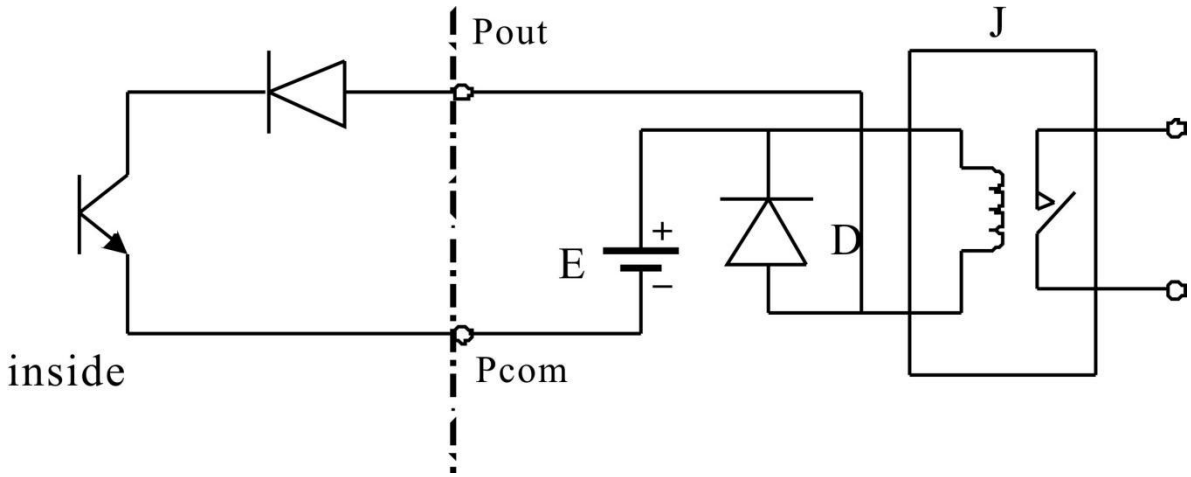

Pic.3.4（c） Digital output connect relay

Commonly relay needs E as 12/24 VDC is extended diode; now most middle relays have this diode inside. If don't have, user should connect one diode outside.

Table of digital output parameter:

Parameter	Test condition	Mini	Standard	Max	Unit
Voltage	IC=100 mA	3	24	36	V
Current	Vol≤1.4V	0	300	350	mA
Frequency	IC=100mA Vcc=24V	0	5000	7500	HZ
High voltage	IC=100mA	Vcc	Vcc	Vcc	V
Low voltage	IC=100mA	0.9	1.0	1.4	V

3.3.6 Analog Signal Output and Calculate

3.3.6.1 Analog Output

There are two signal types: 0～10mA and 4～20mA, user can select from parameter setting.

Signal output is 24V under 0~20mA, it can drive 750Ω resistance.

The formula of signal output:

$$I_0 = \frac{\text{Measure value}}{\text{Full scale value}} \bullet \text{the scale of current} + \text{the zero point of current}$$

The current zero point is 0 when selected output is 0~10mA, and the current zero point is 4mA when selected output is 4~20mA.

To improve signal output distinguish, user should set the measure range properly.

3.3.6.2 Analog Signal Output Adjust

▲ (1) The Converter adjust preparative

After 15 minutes of operation, the inside of the flowmeter has reached thermal stability. Prepare a 0.1% ammeter, or a 250 ohm resistor and 0.1% voltmeter, and connect them as shown in the figure below.

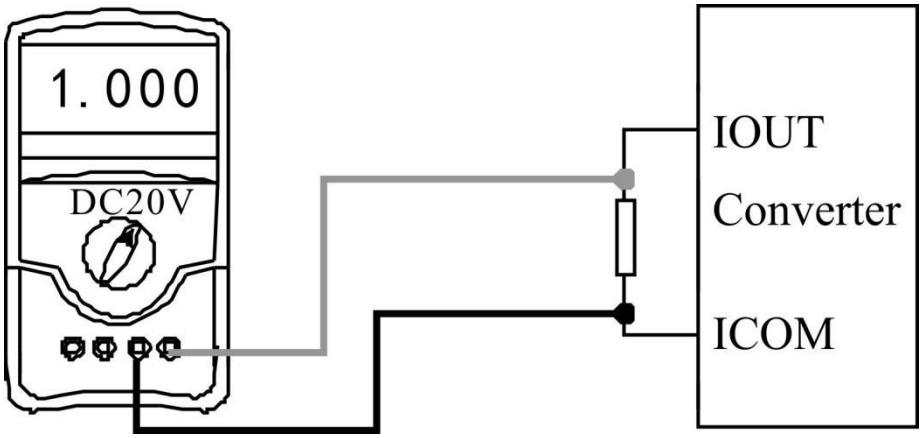

▲(2) Current analog zero point correction:

Get into menu "Parameter Setting" , select the "Analog Zero" item, dial the standard signal source as "0" and adjust the correction coefficient value, so that the ammeter indicates exactly 4mA (±0.004mA).

▲(3) Current full-scale correction

Select the "Analog Range" parameter, switch the standard signal source to the full scale range, and adjust the converter correction.

The coefficient makes the ammeter indicate exactly 20mA (±0.004mA).

After adjusting the current "0" point and full-scale value, the current function of the converter can ensure accuracy.

Conversion the current output linearity of the converter is within 0.1%.

▲(4) Current linearity check:

Set the standard signal source to 75%, 50%, 25%, and check the linearity of the analog output.

3.3.6.3 Electromagnetic Flow Meter Converter's Connection of Current Output:

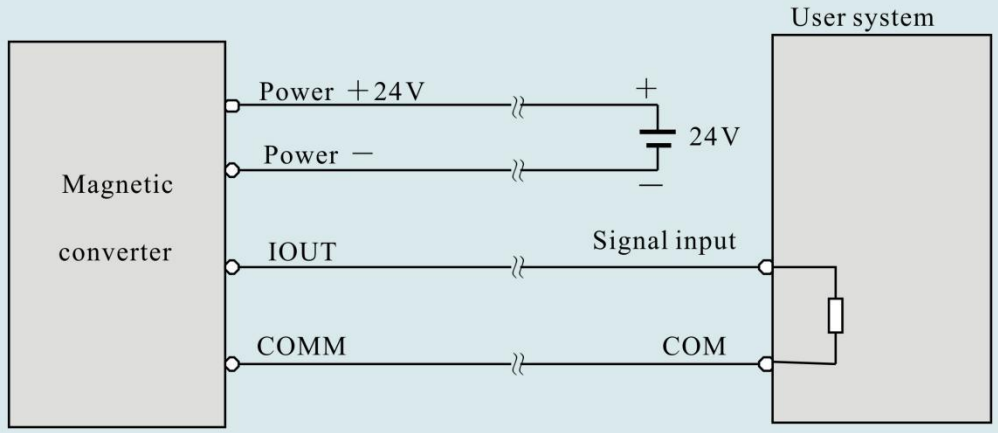

Pic. current output wiring

4. Setting Parameters

After electromagnetic flow meter installed to the pipe, user could do the next work firstly:

◆ Ground the flow meter to earth well.

◆ When adjusting the zero point of the instrument, ensure that the fluid in the pipeline is full and not move.

◆ Ensure that the oxide film of the sensor electrode is formed stably (48 hours after the electrode contact with the fluid).

4.1 Parameters and Setting

After power on, the instrument comes into measure mode automatically, and under this mode it can work normally and display data. Under the parameter setting mode, user can set the parameter by the four keys.

4.1.1 Keys Function

Compound

Down

Up

Enter

● a) Keys' function in self-diagnosis way

"Down" key: Select display data on lower line on screen;
"Up" key: Select display data on higher line on;
"Compound" key + "Enter" key: Come into parameter setting menu
"Enter" key: Press this key to check sensor factor revise history.

Under measure mode， user could adjust the LCD contract by press "Compound" key + "Up" key or "Compound" key + "Down" key for several seconds;

● b) Function keys for parameters setting

"Down" key: Subtract 1 from the number at cursor area;
"Up" key: Plus 1 to the number at cursor area;
"Compound" key + "Down" key: Cursor turns left;
"Compound" key + "Up" key: Cursor turns right;
"Enter" key: In/Out submenu;
"Enter" key: Press two seconds under any state and will return to measure mode.

Note:

(1) "Compound" key should work with "UP" key or "Down" Key at the same time, like Compound Key+UP key or Compound Key+Down Key;

(2) It will return to the measure mode automatically after 3 minutes when under the parameter setting way;

(3) In Flow Zero item, you can move the cursor to + or - on left side , and use "Down" or "Up" to switch + and -;

4.2 Function Keys for Setting Parameters

4.2.1. Functions Select Menu

Press “Compound”+ “Enter” keys, enter functions select menu, press “Up” or “Down” key to select, there are three functions as below:

Code	Functions	Notes
1	Parameters Set	Select this function, It can enter the interface of parameter.
2	Clr Total Rec	Select this function, It can reset the total flow as zero.
3	Fact Modif Rec	Select this function, It can check the factor ‘s modif record

4.2.1.1 Parameters Set

Press “Compound”+”Enter” keys, it displays “Parameters Set” , input password, press “Compound”+”Enter” key, enter parameters setting status.

4.2.1.2 Clr Total Rec

Press “Compound”+“Enter” keys, enter parameters selection, then press “Up” key, find “Clr Total Rec”, input password “10000” (default is 10000, user can also preset the Clr Total Rec password), when the password becomes “00000”, the totalizer become “0” in flow meter.

4.2.1.3 Fact Modif Rec

Press “Compound”+”Enter” keys, enter parameters selection, then press “Up” key, find “Fact Modif Rec” (Detailed consult the Appendix Five).

4.2.1.4 Setting Parameters in Menu

There are 54 parameters , user can set every parameter. The List of Parameters is shown below:

Setting Parameters in Menu

Code	Parameters	Set	Password Grade	Details
1	Language	Select	2	English
2	Comm. Address	Set count	2	0~99
3	Baud Rate	Select	2	300~38400
4	Sensor Size	Select	2	3~3000
5	Flow Unit	Select	2	L/h,L/m,L/s,m^3/h,
6	Flow Range	Set count	2	0~99999
7	Flow Rspns	Select	2	1~50
8	Flow Direct	Select	2	Plus/ Reverse
9	Flow Zero	Set count	2	0~±9999
10	Flow Cutoff	Set count	2	0~599.99%
11	Cutoff Ena	Select	2	Enable/Disable
12	Total Unit	Select	2	0.001m^3~1m^3
13	SegmaN Ena	Select	2	Enable/Disable
14	Analog Type	Select	2	0~10mA /4~20mA
15	Pulse Type	Select	2	Frequency / Pulse
16	Pulse Fact	Select	2	0.001m^3~1m^3
17	Frequency Max	Select	2	1~5999 HZ
18	Mtsnsr Ena	Select	2	Enable/Disable
19	Mtsnsr Trip	Set count	2	59999 %
20	Alm Hi Ena	Select	2	Enable/Disable
21	Alm Hi Val	Set count	2	000.0~599.99 %
22	Alm Lo Ena	Select	2	Enable/Disable
23	Alm Lo Val	Set count	2	000.0~599.99 %
24	Sys Alm Ena	Select	2	Enable/Disable
25	Clr Sum Key	Set count	3	0~99999

26	Snsr Code1	User set	4	Finished Y M
27	Snsr Code2	User set	4	Product number
28	Field Type	Select	4	Type1,2,3
29	Sensor Fact	Set count	4	0.0000～5.9999
30	Line CRC Ena	Select	2	Enable/Disable
31	Lineary CRC1	User set	4	Set Velocity
32	Lineary Fact 1	User set	4	0.0000～1.9999
33	Lineary CRC2	User set	4	Set Velocity
34	Lineary Fact 2	User set	4	0.0000～1.9999
35	Lineary CRC3	User set	4	Set Velocity
36	Lineary Fact 3	User set	4	0.0000～1.9999
37	Lineary CRC4	User set	4	Set Velocity
38	Lineary Fact4	User set	4	0.0000～1.9999
39	Fwd Total Lo	Correctable	5	00000～99999
40	Fwd Total Hi	Correctable	5	00000～9999
41	Rev Total Lo	Correctable	5	00000～99999
42	Rev Total Hi	Correctable	5	00000～9999
43	PlsntLmtEna	Select	3	Enable/Disable
44	PlsntLmtVal	Select	3	0.010～0.800m/s
45	Plsnt Delay	Select	3	400～2500ms
46	Pass Word 1	User correct	5	00000～99999
47	Pass Word 2	User correct	5	00000～99999
48	Pass Word 3	User correct	5	00000～99999
49	Pass Word 4	User correct	5	00000～99999
50	Analog Zero	Set count	5	0.0000～1.9999
51	Anlg Range	Set count	5	0.0000～3.9999
52	Meter Fact	Set count	5	0.0000～5.9999
53	Meter Code 1	Factory set	6	Finished Y /M
54	Meter Code 2	Factory set	6	Product Serial No
55	Check Mode	Factory set	2	No Parity, Odd Parity, Even Parity

Parameters of converters can decide the running status, process and output ways as well as state of output. Correct option and setting of parameters can keep the converters running optimally and get higher accuracies of output bother in display and in measurement.

Total Flow Reset Process

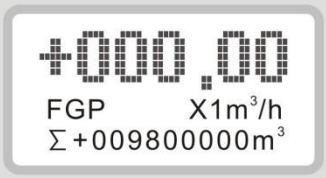

Press ▲▼ and ↵ for several seconds, it appears the parameter setting interface.

Press ▲ find menu “CIr Total Rec”.

Press ↵ to set password（default password 10000, user can also preset the Clr Total Rec password).

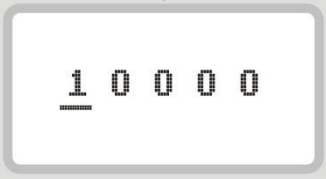

Press ▲▼ + ▲ , ▲▼ + ▼ at the same time for shifting, press ▲ or ▼ for changing the number.

Press ▲▼ and ↵ at the same time, password becomes “00000” then the totalizer will be 0.

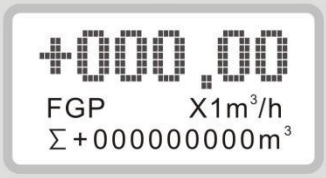

Press ↵ for a while, return to the main interface.

Diameter Modify Process

+000.00
FGP X1m³/h
MTP 0 3 9 8 7 %

Press ▲▼ and ↵ for several seconds, it appears the parameter setting interface.

Parameters Set

Press ↵ the password to enter the menu setting.

0 0 0 0 0

Enter the password 07206,
(Press ▲▼ + ▲, ▲▼ + ▼ at the same time for shifting, press ▲ or ▼ for changing the number.).
After enter the password, press ▲▼ and ↵ for entering into the menu setting.

Language

The first menu is language:
Press ▲ three times, shift to Snsr Size interface.

Snsr Size

Press ↵ to enter the setting, press ▼ or ▲ to set the sensor size.

100mm

After setting, press ↵ several seconds to exit.

+000.00
FGP X1m³/h
MTP 0 3 9 8 7 %

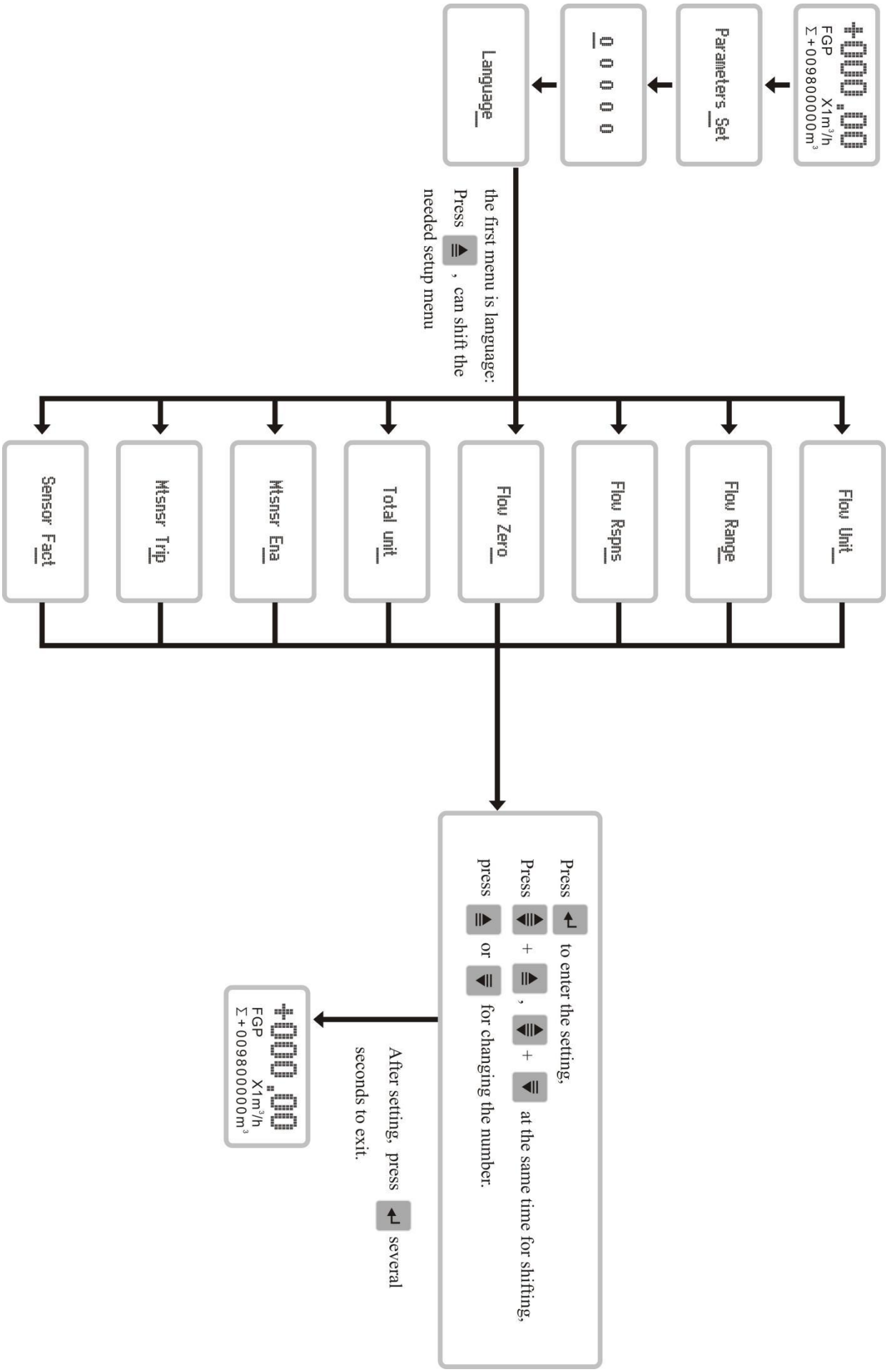
FGP X1m³/h
Σ+009800000m³
Parameters_Set
0 0 0 0
Language_
the first menu is language:
Press , can shift the
needed setup menu
Flow Unit_
Flow Range_
Flow Rspns_
Flow Zero_
Total unit_
Mtsnsr Ena_
Mtsnsr Trip_
Sensor Fact_
Press to enter the setting,
Press + , + at the same time for shifting,
press or for changing the number.
After setting, press several
seconds to exit.
FGP X1m³/h
Σ+009800000m³

There are 6 grades of passwords for setting parameters function. Grades 1 to grade 5 of passwords are for users and grade 6 of password is for manufacturer. Users can reset their passwords of grades 1~4 in grade 5.

Users can check converters parameters in any grade of password. However, if users want to change parameters pf converters, deferent grade of parameters have to be used by the users.

Grade 1 of password (set by manufacturer as 00521):	users can only read parameter.
Grade 2 of password (set by manufacturer as 03210):	users can change 1~24 parameters.
Grade 3 of password (set by manufacturer as 06108):	users can change 1~25 parameters.
Grade 4 of password (set by manufacturer as 07206):	users can change 1~38 parameters.
Grade 5 of password (Fixed):	users can change 1~52 parameters.

Password Grade 5 can be set by skilled users. Grade 4 is mainly used for resetting total volume in password. Grades 1~3 can be set by anyone who can be chosen by users.

4.3 Details Parameters

4.3.1 Language

There are muti languages for converter operation. They can be set by users according to the users needs.

4.3.2 Comm. Address

It means this instrument's address when communicates with many, and has 01~99, holding the 0.

4. 3.3 Baud Rate

300, 1200, 2400, 4800, 9600, 38400, baud rate.

4.3.4 Sensor Size

Converters can be equipped with some deferent sensors that have deferent diameter of measuring pipes. The pipes in deferent diameters from 3mm to 3000mm can be chosen in relative table.

4.3.5 Flow Unit

The flow unit can choose from the parameters (L/s, L/m, L/h, m3/s, m3/m, m3/h, UKG, USG), and the user can choose the proper unit according to the technological requirement and using habit.

4.3.6 Flow Range

Flow range means upper limit value, and lower limit value is set “0” automatically. So, it makes the range, and makes the relation of percent display, frequency output and current output with flow:

Percent display = (flow measure / measure range) x 100 %;

Frequency output = (flow measure / measure range) x frequency full;

Current output = (flow measure / measure range) x current full + base point;

Pulse output will not affect.

4.3.7 Flow Rspns

It means time of filter measure value. The long one can enhance the stability of flow display and output digital, and fits for gross add up of pulse flow; the short one means fast respond rate, and fits for production control. It is set by select.

4.3.8 Flow Direction

If user find that the displayed flow direction is different with acutal flow direction, just need to change the direction parameter in menu. Don't need to change the installation direction of flow meter, exciting cables or signal cables.

4.3.9 Flow Zero

Make sure the sensor is full of flow, and the flow is stillness. Flow zero is shown as velocity of flow, mm/s.

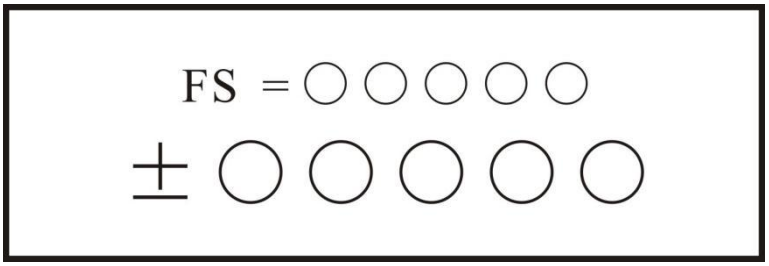

Converter's zero-flow correction displays like this:

Upper small words: FS means measure value of zero;

Lower large words: correction value of zero.

When FS is not "0", make FS = 0. Note: if change the value on next line and FS increases, please change the "+, -" to correct FS to zero.

Flow zero is the compound value of the sensor, and should be recorded in sensor list and band. The unit will be mm/s, and the sign will be opposite with correction value.

4.3.10 Flow Cutoff

Flow cutoff is set in percentage of Upper Limit Range of flow, and users can delete all Negligible Small Signals of flow volume, velocity and percentage out of displaying and outputting them. Sometimes user can delete output of current output signal and frequency (pulse) output signal only to have flow, velocity and percentage being displayed.

4.3.11 Total Unit

Converter display is counter with 9 bits, and the max is 999999999.

Integrator units are L, m3 (liter, stere,).

Flow integrator value:

0.001L	0.010L	0.100L	1.000L
0.001m^3	0.010m^3	0.100m^3	1.000m^3

4.3.12 SegmaN Ena

When "SegmaN Ena" is "enable", if the flow flows, the sensor will export pulse and current。 When it is "disable", the sensor will export pulse as "0" and

current as “0” (4mA or 0mA) for the flow flows reversals.

4.3.13 Output Currents

Output current types can be chosen by users as 1~10mA or 4~20mA practically.

4.3.14 Pulse Type

Two kinds of Pulse Outputs are can be chosen: Frequency Output and Pulse Output. Frequency Output is continuous square waveform and Pulse output is a serial wave of square wave. Frequency output is mainly used for instant flow and total integrated flow in short time measurement. Frequency output can be chosen in equivalent frequency unit and volume of integrated flow can be displayed. Frequency Output can be used in long time measurement for total integrated flow with volume units.

Frequency output and pulse output are usually from OC gates so that DC power supplies and load resistors have to be required (See Part 4.5).

4.3.15 Pulse Fact

Equivalent pulse Unit is referred to one pulse for value of flow. The range of pulse equivalent can be chosen:

Pulse Equivalent	Flow	Pulse Equivalent	Flow
1	0.001L/cp	5	$0.001m^3$/cp
2	0.01L/cp	6	$0.01m^3$/cp
3	0.1L/cp	7	$0.1m^3$/cp
4	1.0L/cp	8	$1.0m^3$/cp

Under the same flow, the smaller pulse, the higher frequency output, and the smaller error will be. The highest pulse output is 100cp/s, and mechanism electromagnetic counter can get 25 frequency/s.

4.3.16 Freque Max

Frequency output range is as the upper limit of flow measure, just the percent flow 100%. Frequency output upper limit can be selected between 1～5000Hz.

The state of empty pipe can be detected with the function of converter. In the case of Empty Pipe Alarm, if the pipe was empty, the signals of analog output and digital output would be zero and displayed flow would be zero, too.

4.3.17 Mtsnsr Ena

The state of empty pipe can be detected with the function of converter. In the case of Empty Pipe Alarm, if the pipe was empty, the signals of analog output and digital output would be zero and displayed flow would be zero, too.

4.3.18 Mtsnsr Trip

When the pipe is full of liquid (whether flowing or not), the parameter of “Mtsnsr” could be modified more easily. The parameter displayed upper line is real MTP, and the parameter displayed bellow is the “Mtsnsr trip” that should be set. When setting “Mtsnsr trip”, you could be according to the real MTP, the value that should be set is usually three to five times of real MTP.

4.3.19 Alm Hi Ena

Users can choose “Enable” or “Disable”.

4.3.20 Alm Hi Val

The parameter of upper limit alarm is percentage of flow range and can be set in the way of setting one numerical value between 0%~199.9%.When the value of flow percentage is larger than the value of setting value, the converter outputs the alarm signal.

4. 3.21 Alm Lo Val

The same as upper limit alarm.

4.3.22 Sys Alm Ena

Select "Enable", with excitation alarm function.

Select "Disable", cancel this excitation alarm function.

4.3.23 Clr Sum Key

The user can set the password with a password above the third level, and then set the password in the total reset menu.

4.3.24 Sensor Code

The sensor code can be used to mark the production time and number of the sensor to match the setting of the sensor coefficient.

4.3.25 Sensor Coefficient

Sensor coefficient: the calibration coefficient of the electromagnetic flowmeter. The coefficient is obtained from the actual standard and is stamped on the sensor plate. The user must put this coefficient in the converter parameter table.

4.3.26 Field Type

There are three exciting frequency types: 1/16 frequency(type 1), 1/20 frequency (type 2), 1/25 frequency (type 3). The small caliber should select 1/16 frequency, and large caliber should select 1/20 frequency or 1/25 frequency. In use, first select the excitation type 1. If the zero point of the flow rate of the meter is too high, then select type 2 or type 3. Note: In which excitation method is calibrated, it must work in which excitation type.

4.3.27 Fwd Total Lo, hi

The total high and low settings can be change the positive cumulative total and the reverse cumulative total value, which is mainly used for instrument maintenance and replacement.

The user uses a 5-level password to enter, and can modify the positive the positive cumulateive amount（Σ+）. The cumulative amount generally set cannot exceed the maximum value counted by the counter（999999999）.

4.3.28 Rev Total Lo, hi

The user uses a 5-level password to enter, and can modify the reverse cumulative amount （Σ-）.Generally, the cumulative amount can not exceed the maximum value （999999999）counted by the counter.

4.3.29 PlsntLmtEn

For paper pulp, slurry and other serosity, the flow measure will have "spike items disturb", because the solid grain friction or concussion the measure electrode(Notes:spike item is refer to the sharp or pointed items such as solid material,stone,etc). converter uses variation restrain arithmetic to conquer the disturbing by designing three parameters to select disturb character.

Set it "enable", start variation restrain arithmetic; set it "disable", close variation restrain arithmetic.

4.3.30 PlsntLmtVl

This coefficient can disturb the variation of spike items disturb, and calculate as percent of flow velocity, thus ten grades: 0.010m/s, 0.020m/s, 0030m/s, 0.050m/s, 0.080m/s, 0.100m/s, 0.200m/s, 0.300m/s, 0.500m/s, 0.800m/s, and the smaller percent, the higher sensitivity of pointed items restrain.

Note: In the application, the higher the sensitivity is not necessarily the better, but the choice should be tested according to the actual situation.

4.3.31 Plsnt Delay

This coefficient can select the width of time of restrain spike items disturb and the unit is ms. If the duration is shorter than flow change in some time, converter will think it is spike items disturb, and if it is longer, converter will think it is natural. It also needs to select parameter in fact.

4.3.32 User’s Password 1~4

Users can use 5 grades of passwords to correct these passwords.

4.3.33 Analog Zero

When the converter is made in the factory, output current has been calibrated to zero scale, that is, accurate 0mA or 4mA output.

4.3.34 Analog Range

When the converters is made in the factory, output current have been calibrated to full scale, that is, accurate 10mA or 20mA output.

4.3.35 Meter Factor

This factor is the special one of sensor-made-factory and the factory use this fact to unite electromagnetic flow meters converters to make sure all the instruments can interchange by 0.1%.

4.3.36 Meter Code 1 and 2

Converter code records the date of manufacturing and serial number of converter.

4.3.37 Check Mode

For RS485 communcation use, default is No Parity Stop 1. Options are below:

No Parity Stop 1, Odd Parity Stop 1, Even Parity Stop 1

No Parity Stop 2, Odd Parity Stop 2, Even Parity Stop 2

5. Infrared Telecontrol Function Keys

The operation of the infrared-hand-remote control keyboard is the same with the operation of the instrument. When use it, please keep the infrared transmitter of the infrared-hand-remote control keyboard and the receiver of the instrument parallel, with the distance of about one meter.

Concrete operation referring to the figure:

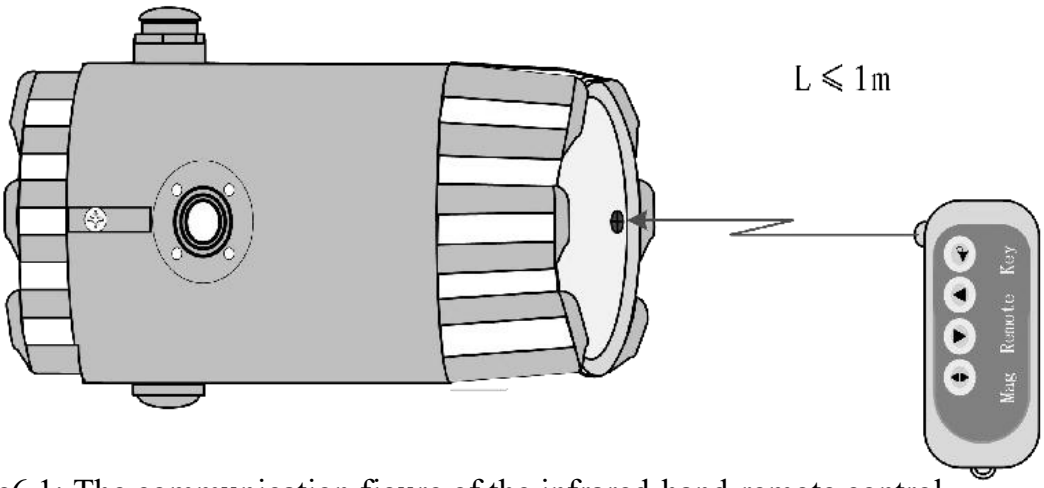

Pic6.1: The communication figure of the infrared-hand-remote control keyboard and the instrument

6. Alarm Information

PCB of electromagnetic flow meters converters uses SMT, so for user, it is unable to service, and cannot open the shell of converter. intelligent converters have self-diagnose function. Without trouble of power and hardware circuit, the normal trouble can be alarmed correctly. This information displays on the left of LCD. The trouble is like this:

FQH ● Flow high limit alarm;

FQL ● Flow low limit alarm;

FGP ● Flow empty pipe alarm;

SYS ● System exciting alarm.

UPPER ALARM ● Flow high limit alarm;

LOWER ALARM ● Flow empty pipe alarm;

LIQUID ALARM ● Flow empty pipe alarm;

SYSTEM ALARM ● System exciting alarm.

7. Trouble Shooting

Item	Trouble Shooting
No display	a) Check the power supply connection; b) Check is the power fuse is OK or not; c) Check the contrast of LCD and regulate it to working state;
Exciting alarm	a) Check if the exciting cables EX1 and EX2 is connecting or not; b) Check if the total resistance of sensor's exciting coil resistances less than 150Ω; c) If a) and b) are OK, the converter is failed.

Empty pipe alarm	● If measured fluid full of testing pipe of sensor; ● When shorting circuit three connectors SIG 1, SIG 2, SGND of converter, and no “Empty Alarm” displayed then the converter works OK. In this case, it is possible that conductivity of measured fluid may be small or empty threshold of empty pipe and range of empty pipe are set wrongly. ● Check if the signal cable is OK; ● Check if the electro-poles are OK or not. Let the flow is zero, then the displayed conductivity should be less than 100%.Resistances of SIG1 to SGND and SIG2 to SGND are all less than 50kΩ (conductivity of water) during measurement operation. (It is better to test the resistances by means of multimeter with pointer to see the charging process well.) ● The DC voltage should be less than 1V between DS1 and DS2 testing the voltage by means of multimeter. If DC voltage is larger than 1V, the electro poles of sensor were polluted that have to be cleaned.
The measured flow is not accurate	● If measured fluid full of testing pipe of sensor; ● Check if the signal cable is OK; ● Check if the sensor factor and the sensor zero point is set according to the sensor label or factory calibration sheet.

Appendix One ON/OFF Switch Diagram

(Only for square remote type converter)

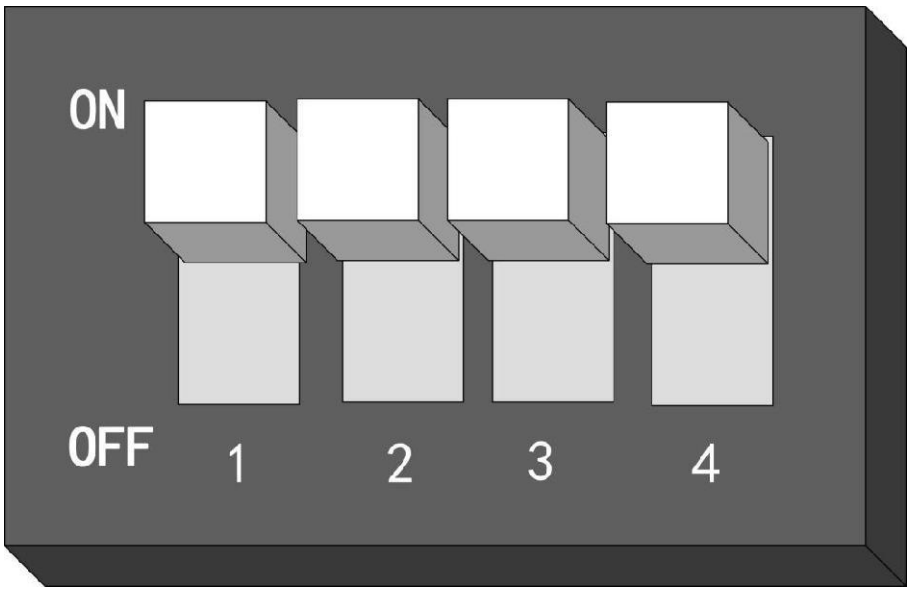

Key 1

ON: Supply up power (24V) for ALML output.

OFF: No connection.

Key 2

ON: Pulse output to OC gate when flow verification was taken. Connect pull -up resistor.

OFF: No connection.

Key 3

ON: Supply up power (24V) for ALMH output.

OFF: No connection.

Key 4

ON: Connected to RS485 terminal resistor for communication

OFF: No connection.

Note: Terminal used for far communication only.

Appendix Two: HART Function Explanation

1. HART Bus Network Pic

HART Bus transfers data-signal through signal line which value is from 4 to 20mA.For this reason, it can save local data communication line and implement data communication. Its adaptive for local using. The local network Pic composed by HART Bus is as follows:

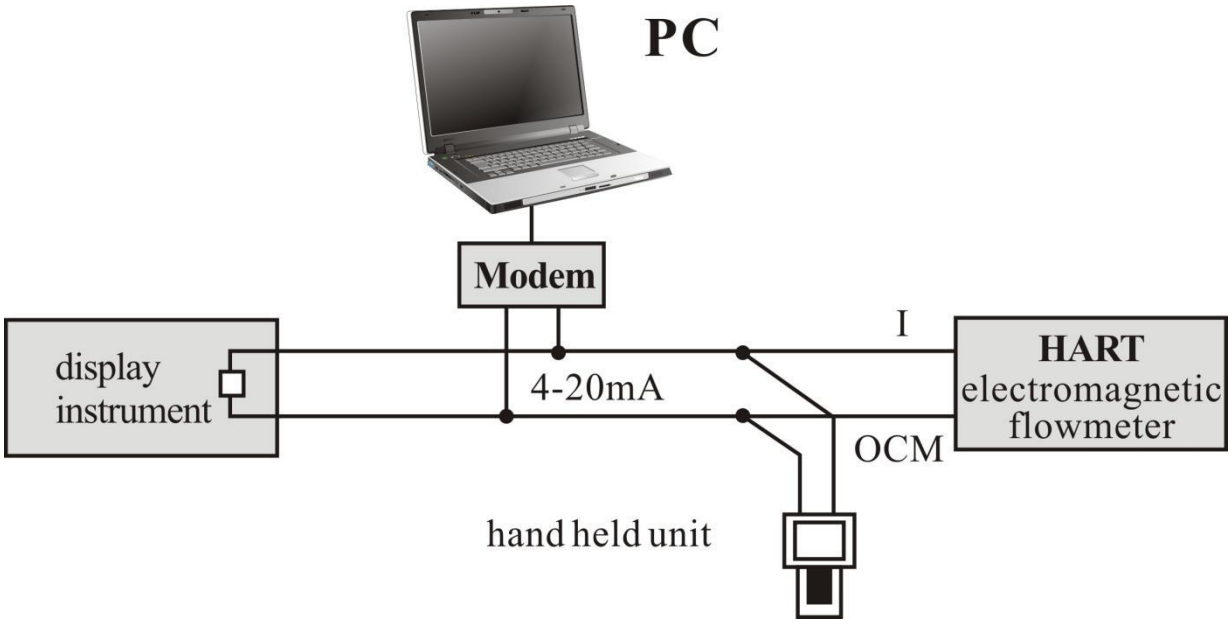

2. Instruction for Setting of The Converter

● If you use the handset of our company, you need to set the meter address to 1 and set the baud rate to 4800;

● If you use other handset such as 375 or 275, you need to set the meter address to 2 and set the baud rate to 4800;

● If the communication mode, the address or the baud rate of the meter is not set correctly, the handset can't set the parameters.

3.Matters need attention of HART using function meter

● Load which is parallel connection between electrical flow meter and Hand held unit and HARTMODEM is on polarity.

● Resistance of circuit should be greater than 200Ω, less than 500Ω.

● Hand held unit and HARTMODEM shouldn't be connection in series in current circuit.

Appendix Three: Flow Coefficient Modification Records

Converter has a function of protecting the Characteristic Flow Factor. The key content is that the factor could not be modified easily. Converter increases a new function to record the modified procedure and modified times of flow zero, sensor factor, and meter factor, any change of these three factors could be recorded. The sensor factor and modifying times could be recorded in Test Report, and when next time testing the factor in Test Report and factor in the convertor are compared to check whether the Characteristic Flow Factor has been changed. The detail about the Characteristic Flow Factor protection function can be found in the appendix.

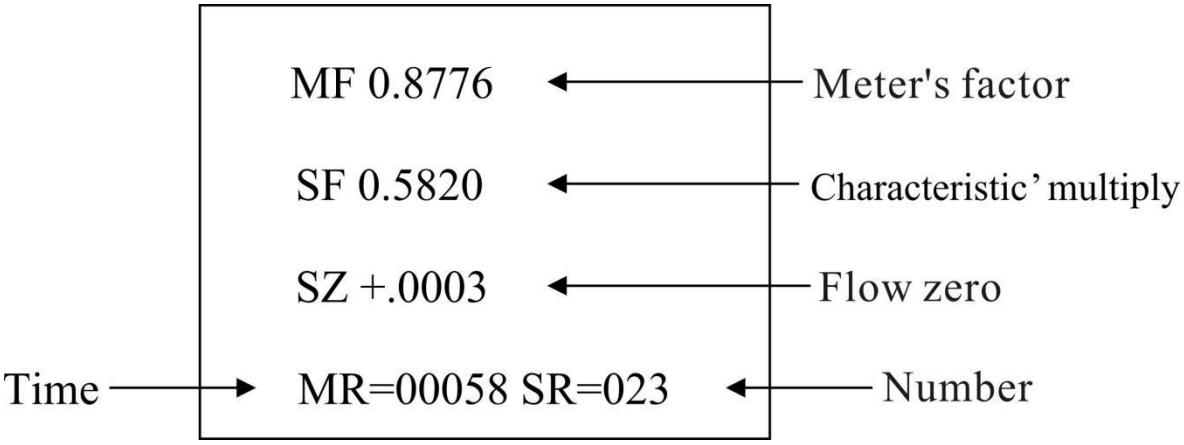

Attention !

The last record is displayed when this item is first entered, if you want to browse the history records press "down key", and could search for the last record to the thirty-two record ahead. Finally the times of record modified (MR) should be written down on the paper before next time test.

Appendix Four: Lightning Protection Notes

When installing, users must connect the converter ' s earthing terminal with the shell, and then earthing them reliably, because the electrical current can be put into the earth through the shell by the gas discharger of lightning protection. If the shell has not been earthing reliably, once lightning, it may cause a personal accident when there is somebody operating the converter. The specific details, you can see the connection diagram.

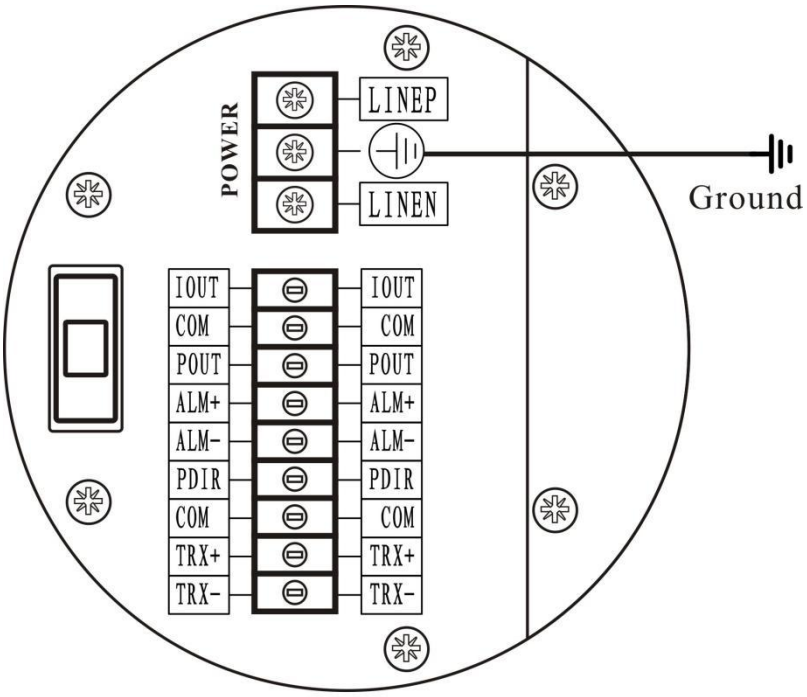

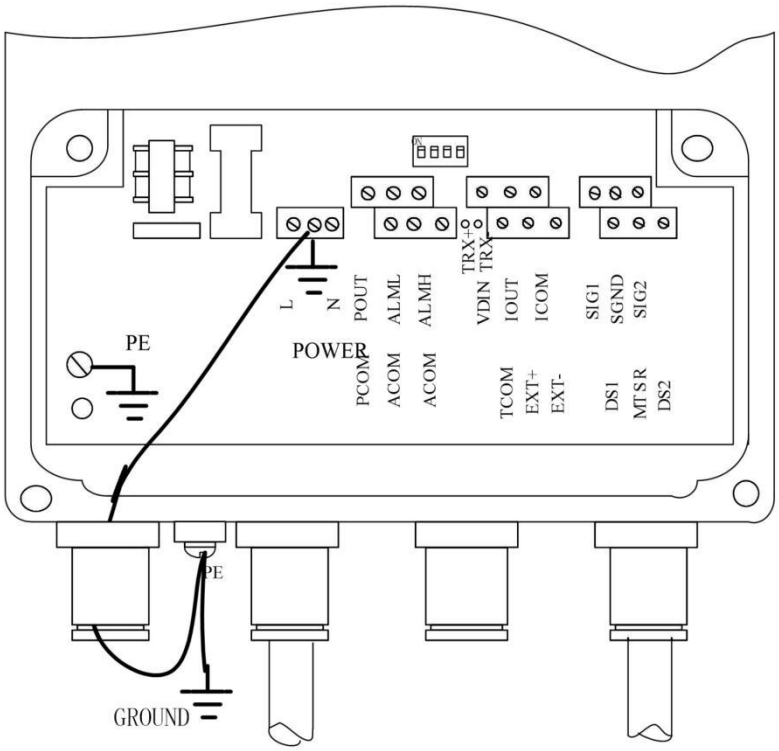

Appendix Five

Electromagnetic flowmeter flow rate table

m/s m³/h mm	0.1	0.5	1	3	5	10	15
DN10	0.02	0.14	0.28	0.84	1.41	2.82	4.24
DN15	0.06	0.31	0.63	1.90	3.18	6.36	9.54
DN20	0.11	0.56	1.13	3.39	5.65	11.31	16.96
DN25	0.17	0.88	1.76	5.30	8.83	17.67	26.50
DN32	0.28	1.44	2.89	8.68	14.47	28.95	43.42
DN40	0.45	2.26	4.52	13.57	22.62	45.23	67.85
DN50	0.70	3.53	7.06	21.20	35.34	70.68	106.02
DN65	1.19	5.97	11.94	35.83	59.73	119.46	179.19
DN80	1.80	9.04	18.09	54.28	90.47	180.95	271.44
DN100	2.82	14.13	28.27	84.82	141.37	282.74	424.11
DN125	4.41	22.08	44.17	132.53	220.89	441.78	662.68
DN150	6.36	31.80	63.61	190.85	318.08	636.17	954.27
DN200	11.31	56.54	113.09	339.29	565.48	1130.97	1696.47
DN250	17.67	88.35	176.71	530.14	833.57	1767.15	2650.72
DN300	25.44	127.23	254.46	763.40	1272.35	2544.68	3817.03
DN350	34.63	173.18	346.36	1039.08	1731.80	3463.61	5195.41
DN400	45.23	226.19	452.38	1357.17	2261.95	4523.89	6785.83
DN450	57.25	286.27	572.55	1717.67	2862.78	5725.55	8588.32
DN500	70.68	353.42	706.85	2120.58	3534.29	7068.58	10602.87
DN600	101.78	508.93	1017.88	3053.63	5089.38	10178.80	15268.20
DN700	138.54	692.72	1385.44	4156.33	6927.21	13854.40	20781.60
DN800	180.95	904.77	1809.56	5428.67	9047.80	18095.60	27143.40
DN900	229.02	1145.11	2290.22	6870.66	11451.10	22902.20	34353.30
DN1000	282.74	1413.72	2827.43	8482.30	14137.20	28274.30	42411.45
DN1200	407.15	2035.75	4071.50	12214.50	20357.50	40715.00	61072.50
DN1400	554.17	2770.88	5541.77	16625.30	27708.80	55417.70	83126.55

DN1600	723.82	3619.11	7238.23	21714.70	36191.10	72382.30	108573.45
DN1800	916.08	4580.44	9160.88	27482.70	45804.40	91608.80	137413.20
DN2000	1131.97	5654.87	11309.70	33929.20	56548.70	113097.00	169645.50
DN2200	1368.48	6842.39	13684.80	41054.30	68423.90	136848.00	205272.00
DN2400	1628.60	8143.01	16286.00	48858.10	81430.10	162860.00	244290.00
DN2600	1911.35	9556.72	19113.40	57340.30	95567.20	191134.00	286701.00
DN2800	2216.71	11083.50	22167.10	66501.20	110835.00	220671.00	332506.50
DN3000	2544.70	12723.50	25446.90	76340.70	127235.00	254469.00	381703.50

● Accuracy curve

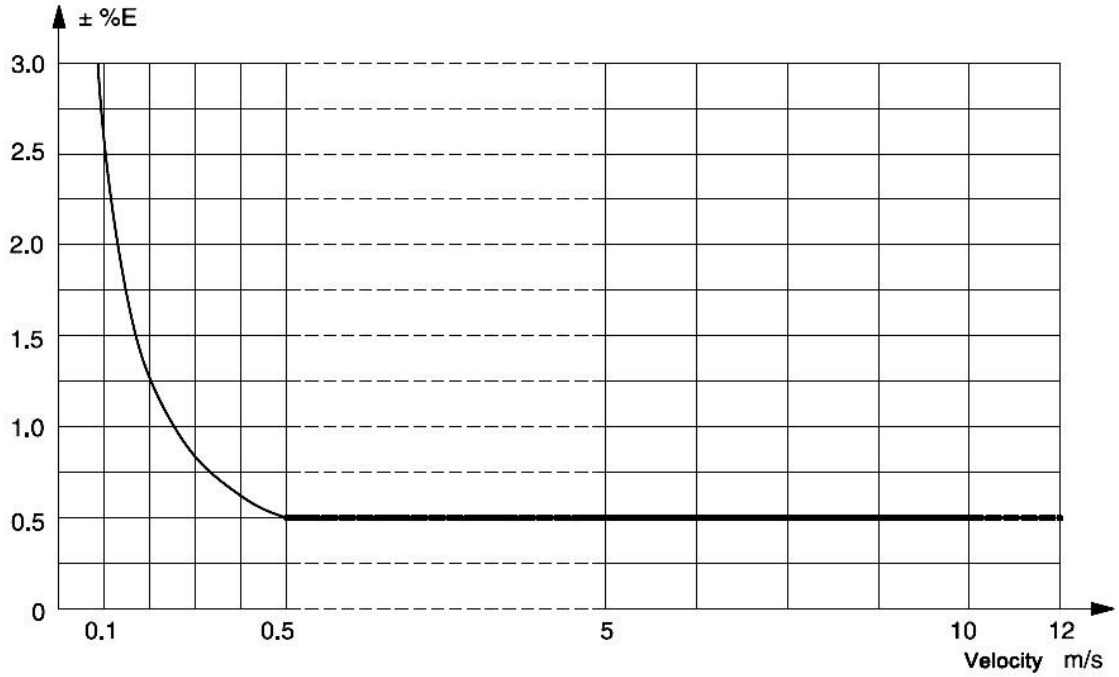

Reference condition:

- Liquid:Water /20℃
- Stability time: 30min
- Pressure:1 bar
- Inlet straight pipe: ≥5D
- Fluid condition: with good flow regime

Instrumentteam PLUS as
post@instrumentteampluss.no