ElecTo

Instrumentteam PLUSS as

ELECTO SJ

ELECTRONIC SINGLE JET METER

The ElecTo SJ is the single-jet meter that offers integrated data communication thanks to its innovative multi-protocol radio electronic register. This variant is designed for both indoor and outdoor residential applications and is available for cold and hot water. The LCD display simplifies data reading and makes additional information available to users and operators. Thanks to dual wM-Bus and LoRaWan communication, it offers maximum flexibility in short and long distance data communication and can be used with both mobile and fixed reading systems.

maddalena®

METERING EXPERTISE

ELECTO SJ

FEATURES

- Electronic single jet meter
- For indoor and outdoor applications
- Available for hot and cold water
- DN: 15÷20
- MID–certified: R MAX 160
- High protection against external magnetic fields
- UV protection of display and protective cover
- Health certifications available for a number of countries
- Rotating register with IP68 rating
- Datalogging with a storage capacity of over 11,000 values
- Integrated wM–Bus, OMS and/or LoRaWAN radio
- Optimized antenna for maximum radio range
- Lithium battery with a minimum life of 13 years in dual mode (varies depending on the configuration chosen)
- Fault detection: fraud, probable leak, overconsumption, reverse flow, blocked meter and reversed meter
- Programming and testing kit available upon request

TYPICAL ERROR CURVE

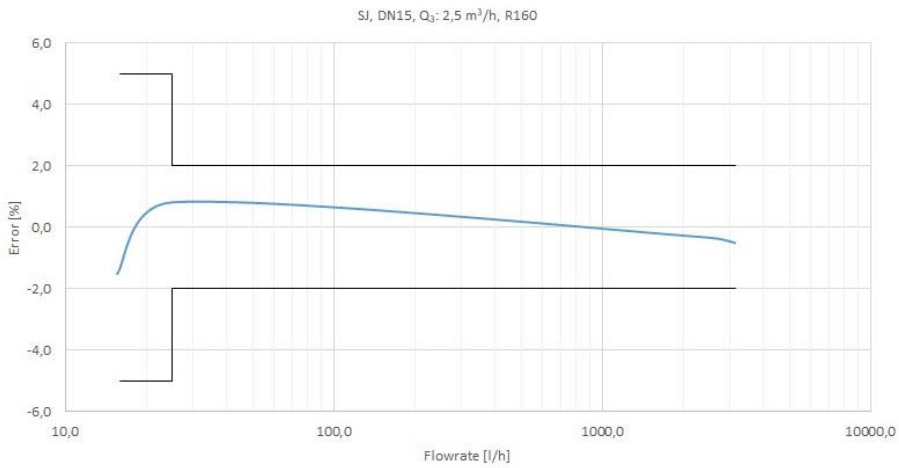

HEAD LOSS DIAGRAM

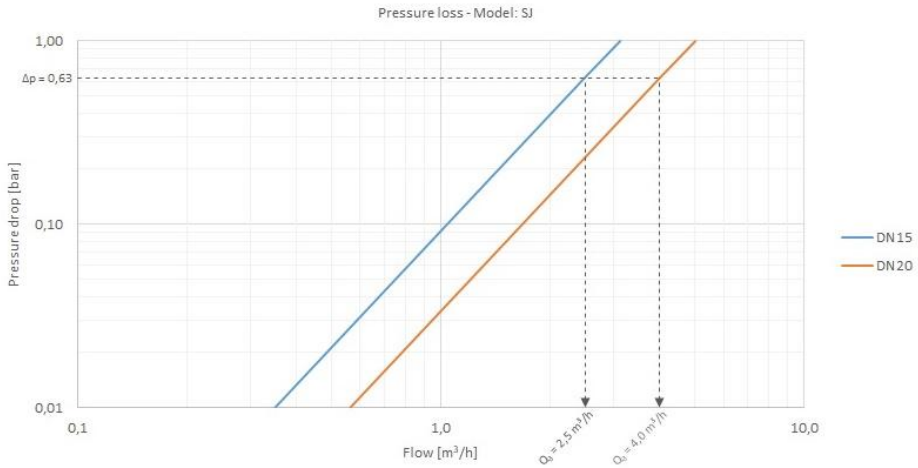

METROLOGICAL PERFORMANCE

Size	mm	15	20
	in	½	3/4″

Module B no.	TCM 142/20 – 5700
Module D no.	0119–SJ–A010–08

Q_3/Q_1 = R Referred to installation position		H↑ ≤ 100 H→; V↓ ≤ 50 V↑ ≤ 40	H↑ ≤ 160 H→; V↓ ≤ 80 V↑ ≤ 63	H↑ ≤ 100 H→; V↓ ≤ 50 V↑ ≤ 40	H↑ ≤ 160 H→; V↓ ≤ 80 V↑ ≤ 63
MID standard performance *					
Q_3	m^3/h	1,6	2,5		4
Q_4	m^3/h	2	3,13		5
R			**100**		
Q_1	l/h	16	15,63	40	
Q_2	l/h	25,60	25,01	64	

* Other values of R available upon request.

TECHNICAL DATA

Maximum permissible error between Q_1 and Q_2 (excluded)		+/– 5%	
Maximum permissible error between Q_2 (included) and Q_4		+/– 2% with water temperature ≤ 30°C +/– 3% with water temperature > 30°C	
Temperature class		T30,T50,T30/90	
Flow profile sensitivity classes		U0 – D0	
Starting flow rate	l/h	4,5	8
Head loss		ΔP63	
Nominal pressure	bar	16	
Maximum reading	m^3	999.999	
Minimum reading	l	1	
Indicative weight	kg	0,40	0,57

DIMENSIONS

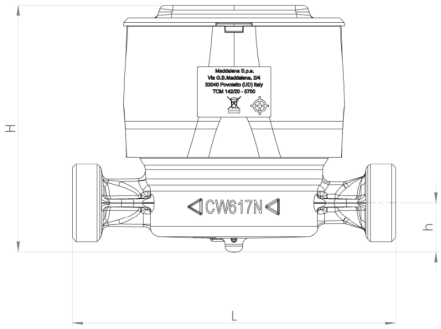

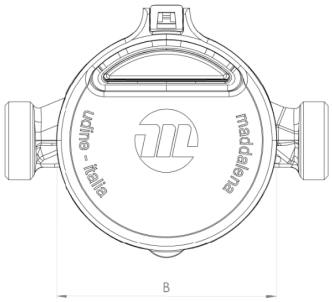

Size	**mm**	15		20
	in	½		3/4″

Thread	**in**	G ¾ B		G 1 B
L	**mm**	80*/110/115/120/130 *only Q_3 2,5 R ≤H100 VR63	80*/110/115/120/130 – *Starting flow rate 7l/h	115/130
H	**mm**	84		
h	**mm**	16,7		16,7
B	**mm**	75		

COMMUNICATION MODULES

MULTI

M-Bus wireless OMS

LoRaWAN

Instrumentteam PLUS as