DIEHL
Metering

Instrumentteam PLUSS as

HYDRUS 2.0

ULTRASONIC METER

APPLICATION

HYDRUS 2.0 is a static ultrasonic water meter designed for all applications of domestic cold water supply enabling accurate measuring with long-term stability under difficult conditions (no measurement of air and insensitive to sedimentation). Developed within the framework of the MID, it complies with the European regulations and holds sanitary conformity certificates (AoC DEU, ACS, WRAS and others). The integrated communication function supports meter data provision via mobile reading (walk-by/drive-by/passive drive-by) or fixed network (upgrade without on-site configuration). In combination with Diehl Metering's IZAR fixed network system, which stands out with excellent coverage, high data granularity and timeliness will be maintained. This is what makes it a high responsive infrastructure to take actions immediately.

FEATURES

- DN 15 to 50 (brass), DN 15 to 20 (composite)
- MID approved with dynamic range up to R 800
- IP 68 suitable for outdoor installations
- Integrated communication based on OMS specifications
- Wireless M-Bus for mobile reading in parallel to Fixed Network
- mioty®4OMS for OMS Generation 5 Fixed Network
- OMS over LoRaWAN® for LoRaWAN Fixed Network
- M-Bus/Pulse/Pulse, wireless M-Bus, wireless M-Bus along with L-Bus/Pulse
- Display with error and alarm codes including leakage detection
- Battery lifetime up to 16 years
- U0 / D0, no need for calming sections

GENERAL

			HYDRUS 2.0
Medium temperature range		°C	+0.1 ... +90
Ambient operating temperature		°C	-10 ... +55
Ambient storage temperature		°C	-10 ... +70 (>35 °C max. 4 weeks)
Environmental class			O (Outdoors)
Mechanical environmental class			M2
Electromagnetic environmental class			E2
Housing material			Composite; Brass
Nominal pressure	MAP	bar	16
Power supply			Two 3.6 VDC lithium batteries
Battery lifetime[1]			Up to 16 years
Communication interfaces			Optical, OMS Generation 5 (mioty®4OMS) 868 MHz, OMS Generation 3/4 wireless M-Bus 434/868 MHz, M-Bus, L-Bus and Pulse, LoRaWAN® 868 MHz, mioty® for Metering 434/868 MHz
Data storage			For errors, alarms and measuring values, data logging capabilities to record up to 1024 daily values +32 monthly values and two annual due dates
Protection class			IP 68

[1] Depends on the sending interval of the radio telegram, the telegram length and the ambient temperature at the installation

TECHNICAL DATA DISPLAY

	HYDRUS 2.0
Display indication	LCD, 9-digit, additional symbols/display counter/unit
Units displayed DN 15 - DN 50	Volume (m^3 + 3 decimal places) and flow rate (m^3/h + 3 decimal places)
Unit displayed DN50 (only for DMFR)	Volume (m^3 + 2 digits after decimal point) and flow rate (m^3/h + 3 digits after decimal point)
Values displayed	Display test - volume - battery lifetime - firmware version - software checksum - flow - current/continuous/historical error - alarm status - high resolution volume - due date - due date volume - reverse volume - display counter - low battery indication - leakage indication - metrological log access - radio signal ON/OFF - alarm indication - billing value indication - and more display loop options to choose from.

INTERFACES - OVERVIEW

	HYDRUS 2.0
Optical	For switching the display loop and configuring / reading the meter via IZAR@MOBILE
Wireless M-Bus	434 or 868 MHz, OMS Generation 3/4, OMS radio as standard for mobile reading (R3) sent every 14 / 64 seconds (default) and wireless M-Bus for fixed network (R4/ R4+) sent every 5 / 15 / 60 minutes
mioty®4OMS	868 MHz, OMS Generation 5, OMS as standard for mobile reading (R3) sent every 64 seconds (default) and mioty®4OMS for fixed network sent every 60 minutes
mioty® for Metering	434 or 868 MHz, OMS Generation 3/4, OMS radio as standard for mobile reading (R3) sent every 64 seconds (default) and mioty® for Metering for fixed network (L1C) sent every 60 minutes
LoRaWAN®	868 MHz, OMS over LoRaWAN® for fixed network sent every 3 h / 5 h / 6 h (default) and OMS as standard for mobile reading (R3) sent every 64 seconds (default); Complies to v1.0.3, certified to v1.0.2, Class A, supports Adaptive data rate (ADR) and Over The Air (OTA) activation
M-Bus	2400 baud, cable length 1.5 m, power supply only via built-in battery combined with two Pulse outputs
L-Bus	In combination with radio models, cable length 1.5 m (only one interface communicating at the same time)
Pulse (Open drain)	Two Pulse outputs, or one Pulse and one L-Bus output, Pulse cable length 1.5 m

SECURITY

	HYDRUS 2.0
Wireless M-Bus	OMS Generation 4 Profile B, individual keys (default) / OMS Generation 3 (selectable)
mioty®4OMS	OMS Generation 4 Profile B, individual keys (default)
mioty® for Metering	OMS Generation 4 Profile B, individual keys (default) / OMS Generation 3 (selectable)
LoRaWAN®	Fixed Network uses internal LoRaWAN® transport encryption; Mobile Network uses OMS Generation 4 Profile B, individual keys (default)

PRIVACY

The HYDRUS 2.0 stores internally historical consumption values. Logging data is available by local reading with IZAR@MOBILE and remote reading. Optical and radio communication implements encryption and authentification according to OMS Specification and LoRaWAN® specification.

VOLUME / PULSE OPEN DRAIN

		HYDRUS 2.0
Max. input voltage	V	30
Max. input current	mA	27
Max. voltage drop at active output	V/mA	2/27
Max. current through inactive output	µA/V	5/30
Max. reverse voltage without destroying outputs	V	6 (in case current does not exceed 27 mA)
Pulse rates	l/pulse	Decadic 1 / 10 (depending on nominal diameter)
Pulse output 1 variants		Total volume or forward volume
Pulse output 2 variants		Flow direction or error or reverse volume
Pulse frequency		Max. frequency 10 Hz
Pulse width		50 - 500 ms

POSSIBLE COMMUNICATION INTERFACES

	HYDRUS 2.0
Wireless M-Bus/Pulse/L-Bus	434 or 868 MHz + 3 wires
Wireless M-Bus only	434 or 868 MHz + without wire
mioty®4OMS and OMS radio/Pulse/L-Bus	868 MHz + 3 wires
mioty®4OMS and OMS radio only	868 MHz + without wire
mioty® for Metering and OMS radio/Pulse/L-Bus	434 or 868 MHz + 3 wires
mioty® for Metering and OMS radio only	434 or 868 MHz + without wire
LoRaWAN® and OMS radio only	868 MHz + without wire
M-Bus only	2 wires
M-Bus/Pulse/Pulse	5 wires
Pulse/Pulse	3 wires (without fraud) or 4 wires (with fraud)
IZAR BE PULSE	4 wires (with fraud)
Line for DMFR only	With IZAR BE PULSE completly soldered to HYDRUS 2 to put a radio clip-on module (LoRaWAN, Wize, OMS)

REACH

Information pursuant to Article 33 (1) of Regulation (EC) No 1907/2006 of the European Parliament and of the Council of 18 December 2006:
This product series contains components with the following substances in a concentration of more than 0.1% weight by weight (w/w):
- Lead (only for the flange variants) - (CAS no.: 7439-92-1)
- Lead titanium zirconium oxide (CAS no.: 12626-81-2)

TECHNICAL DATA

Nominal diameter	DN	mm	15	15[2]	15	15	20	20	20
Permanent flow rate	Q_3	m^3/h	2.5	2.5	2.5	2.5	4	4	4
Overall length	L	mm	110	115	165	170	130	165	190
Dynamic (Q_3/Q_1)	R		800	800	800	800	800	800	800
Overload flow rate	Q_4	m^3/h	3.125	3.125	3.125	3.125	5	5	5
Transitional flow rate	Q_2	l/h	5	5	5	5	8	8	8
Minimum flow rate	Q_1	l/h	3.13	3.13	3.13	3.13	5	5	5
Starting flow rate		l/h	1.4	1.4	1.4	1.4	2.5	2.5	2.5
Pressure loss at Q_3		bar	0.46	0.46	0.46	0.46	0.4	0.4	0.4
Pressure loss at Q_4		bar	0.72	0.72	0.72	0.72	0.63	0.63	0.63
Maximum flow rate[1]	Q_{high}	m^3/h	4.37	4.37	4.37	4.37	7	7	7
Flow coefficient	K_v	m^3/h	3.69	3.69	3.69	3.69	6.32	6.32	6.32

[1] Outlet pressure minimum 3 bar, maximum 100 hours per year, closed pipeline network
[2] Please see table DIMENSIONS

APPROVAL

		DN 15 - 20
Approval		MID DE-19-MI001-PTB012
Dynamic range (Q_3/Q_1)	R	Up to 800
Standards		EN 4064, EN 14154, OIML R49
Sanitary conformity		AoC DEU, ACS, WRAS, Belgaqua, KIWA Netherlands, OTH, PZH, SVGW
OMS Certification		OMS Generation 4
LoRaWAN® certification		1.0.2

DYNAMIC RANGE (R=Q3/Q1)

		DN 15 - 20
Q_3 1.6 m^3/h - T30 / T50	R	400
Q_3 1.6 m^3/h - T70 / T90	R	400H; 250V
Q_3 2.5 m^3/h - T30 / T50	R	160; 800 (400 for L 115 mm)
Q_3 2.5 m^3/h - T70 / T90	R	160; 400; 800H / 400V (250 for L 115 mm)
Q_3 4 m^3/h - T30	R	160; 400; 800 (630 for L 105 mm and 115 mm)
Q_3 4 m^3/h - T50 / T70 / T90	R	160; 400; 800H / 400V (630H for L 105 mm and 115 mm)

H = horizontal installation position / V = vertical installation position
Other values on request

DIMENSIONS

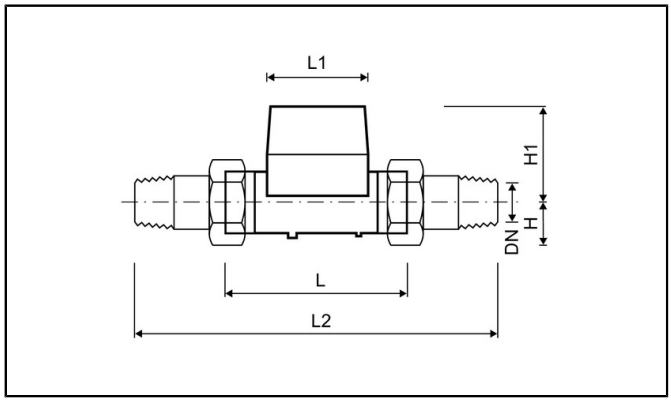

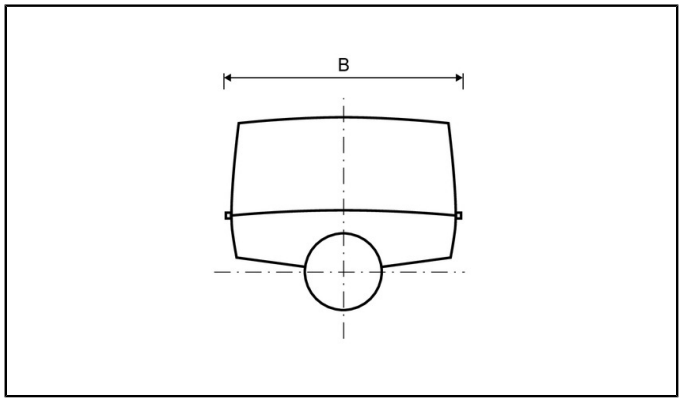

Nominal diameter	DN	mm	15	15[2]	15	15	20	20	20
Permanent flow rate	Q_3	m^3/h	2.5	2.5	2.5	2.5	4	4	4
Overall length	L	mm	110	115	165	170	130	165	190
Housing			brass/ composite	brass/ composite	brass/ composite	brass/ composite	brass	brass	brass/ composite
Counter length	L1	mm	89	89	89	89	89	89	89
Counter width	B	mm	89	89	89	89	89	89	89
Body (DMFR only)			brass/ composite	brass/ composite	brass/ composite	brass/ composite	brass	brass	brass/ composite
Overall length with coupling	L2	mm	190	195	245	250	230	295	290
Connection thread on meter		Inch	G¾B	G¾B	G¾B	G¾B	G1B	G1¼B	G1B
Connection thread of coupling		Inch	R½	R½	R½	R½	R¾	R1	R¾
Height	H1	mm	71	71	71	71	74	74	74
Weight without coupling (approx.)		kg	0.7 / 0.5	0.7 / 0.5	0.8 / 0.6	0.8 / 0.6	0.8	1.0	0.9 / 0.6
Weight with coupling (approx.)		kg	1.1 / 0.9	1.1 / 0.9	1.2 / 1.0	1.2 / 1.0	1.2	1.6	1.3 / 1.0
Height	H	mm	18	18	18	18	21	27	21

[1] Wrench size should not be bigger than 38 mm
[2] Further version with connection thread on meter inlet G7/8B and meter outlet G3/4B on request.

PRESSURE LOSS GRAPH / TYPICAL ERROR GRAPH

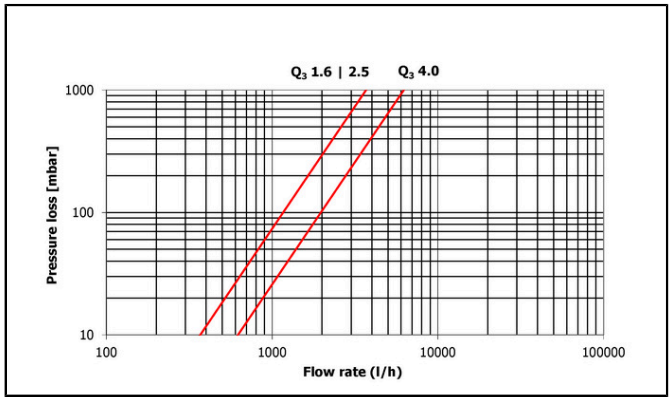

Pressure loss graph

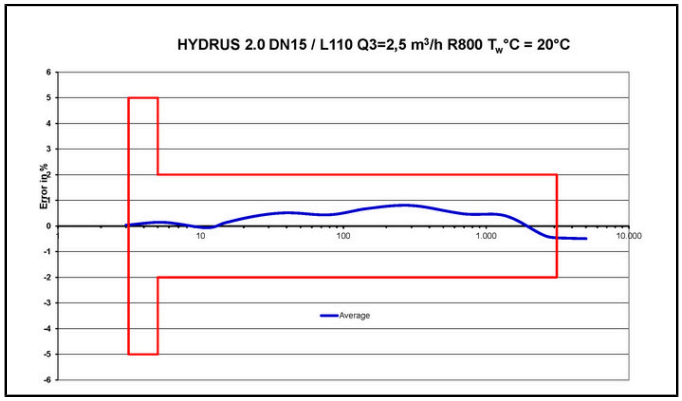

Typical error graph

TECHNICAL DATA

Nominal diameter	DN	mm	25	25	32	40	50	50	50	50
Permanent flow rate	Q_3	m^3/h	6.3	10	10	16	16	16	25	25
Overall length	L	mm	260	260	260	300	270	300	270	300
Dynamic (Q_3/Q_1)	R		400	800	800	800	250	250	400	400
Overload flow rate	Q_4	m^3/h	7.87	12.5	12.5	20	20	20	31.25	31.25
Transitional flow rate	Q_2	l/h	25.2	20	20	32	102	102	100	100
Minimum flow rate	Q_1	l/h	15.8	12.5	12.5	20	64	64	62.5	62.5
Starting flow rate		l/h	5	5	5	8.7	25	25	25	25
Pressure loss at Q_3		bar	0.19	0.48	0.33	0.2	0.14	0.14	0.33	0.33
Pressure loss at Q_4		bar	0.3	0.75	0.51	0.31	0.22	0.22	0.52	0.52
Maximum flow rate[1]	Q_{high}	m^3/h	11.02	17.5	17.5	28	32.13	32.13	32.13	32.13
Flow coefficient	K_v	m^3/h	14.45	14.43	17.41	36.0	44.0	44.0	44.0	44.0

[1] Outlet pressure minimum 3 bar, maximum 100 hours per year, closed pipeline network

APPROVAL

		DN 25 - 50
Approval		MID DE-19-MI001-PTB012
Dynamic range (Q_3/Q_1)	R	Up to 800
Standards		EN 4064, EN 14154, OIML R49
Sanitary conformity		AoC DEU, ACS, WRAS, Belgaqua, KIWA Netherlands, OTH, PZH, SVGW
OMS Certification		OMS Generation 4
LoRaWAN® certification		1.0.2

DYNAMIC RANGE (R=Q3/Q1)

		DN 25 - 50
Q_3 6.3 m^3/h - T30	R	160; 400
Q_3 6.3 m^3/h - T50 / T70 / T90	R	160; 400H / 250V
Q_3 10 m^3/h - DN 25, DN 32 - T30	R	160; 400; 800
Q_3 10 m^3/h - DN 25, DN 32 - T50 / T70 / T90	R	160; 400; 800H / 400V
Q_3 16 m^3/h - DN 40 - T30	R	160; 400; 800
Q_3 16 m^3/h - DN 40 - T50 / T70 / T90	R	160; 400; 800H / 400V
Q_3 16 m^3/h - DN 50	R	250
Q_3 25 m^3/h - DN 50	R	400

H = horizontal installation position / V = vertical installation position
Other values on request

DIMENSIONS

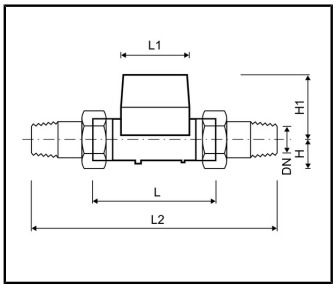

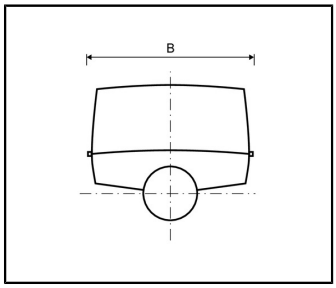

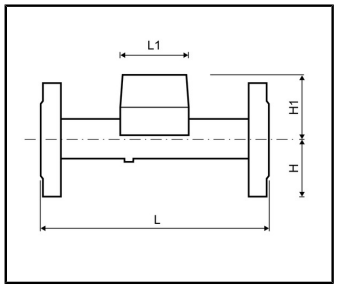

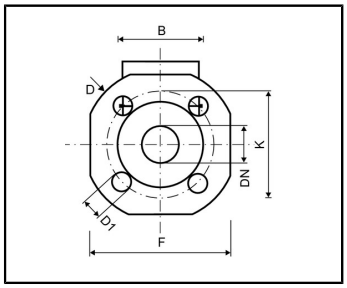

Nominal diameter	DN	mm	25	25	32	40	50	50	50	50
Permanent flow rate	Q_3	m^3/h	6.3	10	10	16	16	16	25	25
Overall length	L	mm	260	260	260	300	270	300	270	300
Housing			brass	brass	brass	brass	brass	brass	brass	brass
Counter length	L1	mm	89	89	89	96	92	92	92	92
Counter width	B	mm	89	89	89	89	94	94	94	94
Body (DMFR only)			brass	brass	brass	brass	brass	brass	brass	brass
DIMENSIONS - THREAD			.	.	.	.	.	.	.	.
Overall length with coupling	L2	mm	380	380	380	440	390	420	390	420
Connection thread on meter		Inch	G1¼B	G1¼B	G1½B	G2B	G2½B	G2½B	G2½B	G2½B
Connection thread of coupling		Inch	R1	R1	R1¼	R1½	R2	R2	R2	R2
Height	H1	mm	78	78	78	82	90	90	90	90
Weight without coupling (approx.)		kg	1.4	1.4	1.5	2.6	3.9	4.05	3.9	4.05
Weight with coupling (approx.)		kg	2.0	2.0	2.1	3.8	5.5	5.65	5.5	5.65
Height	H	mm	27	27	30	36	41	41	41	41
DIMENSIONS - FLANGE			.	.	.	.	.	.	.	.
Flange diameter	D	mm	115	115	140	148	-	-	-	-
Hole circle diameter	K	mm	85	85	100	110	-	-	-	-
Number of screwholes		pcs	4	4	4	4	-	-	-	-
Screwhole diameter	D1	mm	14	14	18	18	-	-	-	-
Height	H	mm	50	50	62.5	69	-	-	-	-
Height	H1	mm	84	84	84	87	-	-	-	-
Width	F	mm	100	100	125	138	-	-	-	-
Weight with flanges (approx.)		kg	3.4	3.4	4.6	6.3	-	-	-	-

PRESSURE LOSS GRAPH / TYPICAL ERROR GRAPH

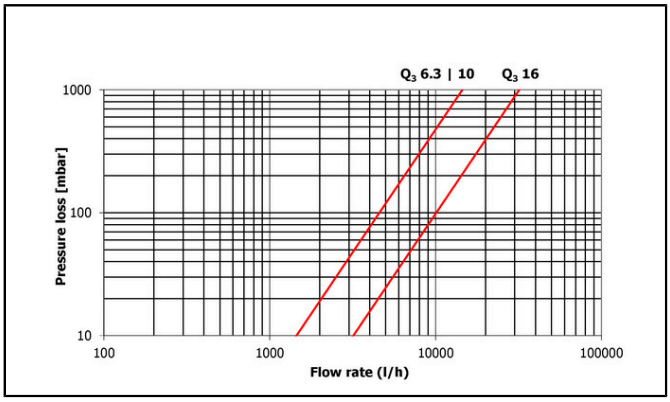

Pressure loss graph

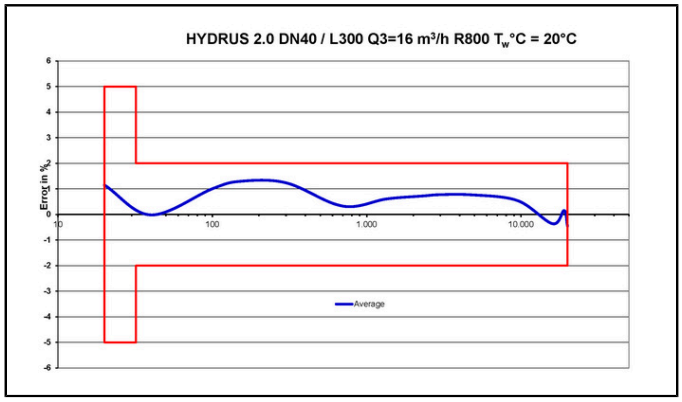

Typical error graph

Economic Actor Information

Applicable regulation and legal obligations for products may change.

DIEHL METERING monitors applicable regulation to ensure their products comply at the date of placing on the market.

Each economic actor making products available on the market thereafter must independently keep informed about the current applicable regulation.

For questions, please contact: metering-germany-info@diehl.com

Instrumentteam PLUS as