AXIOMA Metering UAB

ULTRASONIC HEATING AND COOLING ENERGY METER QALCOSONIC E3

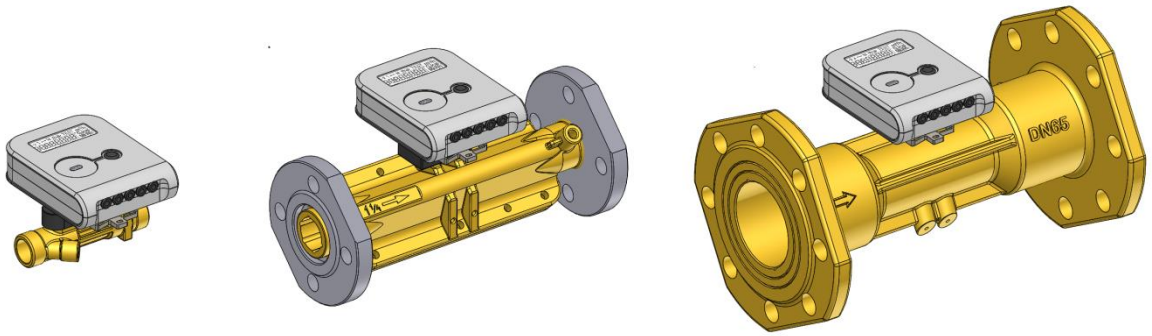

TECHNICAL DESCRIPTION AND OPERATION GUIDE

PEE3V01

KAUNAS
2018

Table of contents

SAFETY REQUIREMENTS 3
1 APPLICATION FIELD 4
2 TECHNICAL SPECIFICATIONS 6
3 OPERATING PRINCIPLE 9
4 MARKING AND SEALING 10
5 INSTALLATION PROCEDURE 11
6 OPERATION PROCEDURE 16
7 VERIFICATION 28
8 TRANSPORTATION AND STORAGE 28
Annex A 29
Annex B 31
Annex C 37
MANUFACTURER'S WARRANTY 39

EU DECLARATION OF CONFORMITY

AXIOMA Metering UAB, Kulautuvos g. 45a, LT-47190 Kaunas, Lietuva / Lithuania, hereby declares that the heat meter QALCOSONIC E3 conforms to the essential requirements of the following Directives:

2014/32/EU	Directive 2014/32/EU of the European Parliament and of the Council of 26 February 2014 on the harmonisation of the laws of the Member States relating to the making available on the market of measuring instruments (recast)
2014/30/EU	Directive 2014/30/EU of the European Parliament and of the Council of 26 February 2014 on the harmonisation of the laws of the Member States relating to electromagnetic compatibility (recast)
2014/35/EU	Directive 2014/35/EU of the European Parliament and of the Council of 26 February 2014 on the harmonisation of the laws of the Member States relating to the making available on the market of electrical equipment designed for use within certain voltage limits
2014/53/EU	Directive 2014/53/EU of the European Parliament and of the Council of 16 April 2014 on the harmonisation of the laws of the Member States relating to the making available on the market of radio equipment

Kaunas, 2017-08-21

EU-Type Examination Certificate No LT-1621-MI004-032

Quality System Certificate No KS-1621-MP-003.18

The Notified Body:
Laboratory of Heat Equipment Research and Testing
of the Lithuanian Energy Institute, Lithuania,
Notified Body Number 1621.

For EU Customers only - WEEE Marking

Marking of electrical and electronic equipment in accordance with Article 14 (2) of Directive 2012/19/EU

It is prohibited to dispose a meter marked with this sign into an unsorted municipal waste container together with other waste!

This symbol on the product indicates that it will not be treated as household waste. It must be handed over to the applicable take-back scheme for the recycling of electrical and electronic equipment. For more detailed information about the recycling of this product, please contact your local municipal office

SAFETY REQUIREMENTS

Before operating the meter, this Technical Description and the User Manual must be read and their instructions must be observed.

- When the meter is powered from a battery (3.6 V), the risk to safe operation is posed only by the heat carrier, which may have a pressure of up to 2.5 MPa and a temperature of up to 130 ^{o}C.

- When the meter is powered from the mains (230 V), an additional risk is posed by life-threatening alternating current. The meter must be installed and maintained in accordance with the requirements of the Safety Regulations related to the Operation of Electrical Installations.

- Meters can be installed and maintained only by specialists who have required qualifications (to work with electrical installations of up to 1000 V) and permits, are familiar with the technical documentation for the heat meter, and have received instruction briefing on work safety.

- No protective grounding is provided for because the housing of the electronic unit complies with the requirements of Protection Class II.

- Unauthorised dismantling or repair of the device is prohibited.

- Safety guarantees at installation and service of meter is:
  - Reliable insulation of electrical circuits,
  - Hermetic fitting of primary flow and temperature sensors into the pipeline,
  - Reliable fastening of sub-assemblies of heat meter at installation.

- The repair, replacement, connection, and disconnection of the sub-assemblies of the meter may only be possible **after disconnecting from the mains** (when the electronic unit is powered from 230 V mains) **and having made sure that there is neither pressure nor heat carrier in the pipeline**.

- **When the meter is powered from 230 V mains:**

  - Meter is connected to 230 V mains by a double-wire copper cable with a diameter of 2 × 0.25 mm^2 (a non-detachable cable is included in the supply package of the meter).
  - Meter should be connected to 230 V mains through a single-pole automatic 1A alternating current switch.
  - Automatic switch should be a part of the installation of the building. The automatic switch should be marked as a meter disconnecting device and should be installed near the meter in a position easily accessible by the meter servicing operator.

  The meter and its parts should be installed so that not to hinder the use of the automatic switch.

  It is recommended that the switches for disconnecting power supply be installed in the same cabinet and adapted to the power used by the device.

- Operating conditions:
  - ambient temperature from +5 ^{o}C to +55 ^{o}C;
  - humidity up to 93%.

<u>Caution</u>: If this equipment is used in a manner not specified by the manufacturer, the protection provided by the equipment may be impaired!

1 APPLICATION FIELD

The ultrasonic heating and cooling energy meter QALCOSINIC E3 (hereinafter referred to as “the meter”) is designed to measure the consumption of heating and cooling energy and record data in two separate registers. It is used in individual or district heating facilities (residential buildings, enterprises, organisations or supply facilities, etc.) for the commercial metering of consumed energy where water is the heat carrier.

This is a compact microprocessor meter for mounting optionally either at the supply or return heat exchange circulation system with permanently connected temperature sensors.

The meter complies with the requirements of Annex 1, Annex MI004 to the Technical Regulation on Measuring Instruments and harmonised standards LST EN 1434 – Heat meters (LST EN 1434-1:2016, LST EN 1434-2:2016, LST EN 1434-3:2016, LST EN 1434-4:2016, LST EN 1434-5:2016).

The meter meets the requirements of Environmental Class C according to LST EN1434-1:2016.

Climatic environmental conditions:	Temperature range: from 5 ^{o}C to 55 ^{o}C; Humidity: condensing, Location: closed,
Mechanical environment class:	M1
Electromagnetic environment class:	E2

Type number combination of the heat meter :

QALCOSONIC E3 - ☐ - ☐ - ☐ - ☐ - ☐ - ☐ - ☐ - ☐ - ☐ - ☐ - ☐ - 15

Meter type

Installation site of the flow sensor:	*Code*
In supply pipe	1
In return pipe	2

Destination of the meter:	*Code*
Meter for heating	1
Meter for heating and cooling	2

Ratio of the flow rates (q_p/q_i):	*Limits of temperature differences:*	*Code*
100	2 K	1
250*	2 K	2
100	3 K	3
250*	3 K	4

Flow sensor:

qp, m^3/h	*L, mm*	*End connection*	*Code*	*qp, m^3/h*	*L, mm*	*End connection*	*Code*
0,6	110	G ¾	11	3,5	260	G1 1/2	42
1	110	G ¾	12	3,5	260	DN25	43
1,5	110	G ¾	13	3,5	260	DN32	44
1,5	165	G ¾	14	6	260	G1 ¼	45
1,5	130	G1	21	6	260	G1 1/2	46
2,5	130	G1	22	6	260	DN25	47
0,6	190	G1	31	6	260	DN32	48
0,6	190	DN20	32	10	300	G2	51
1	190	G1	33	10	300	DN40	52
1	190	DN20	34	15	270	DN50	61
1,5	190	G1	35	25	300	DN65	71
1,5	190	DN20	36	40	300	DN80	81
2,5	190	G1	37	40	350	DN80	82
2,5	190	DN20	38	60	350	DN100	91
3,5	260	G1 ¼	41	60	360	DN100	92

Communication interface:

Type	*Code*	*Type*	*Code*
Not included	0	M-bus and RF 868 MHz	3
M-bus	1		
RF 868 MHz	2		

Power supply source type:	*Code*		*Code*
Internal battery	1	Mains supply 230 V AC	3
External 24 V AC/DC voltage	2		

Length of the flow sensor signal wire:	*Code*
1,2 m	1
2,5 m	2
5,0 m	5

Extra communication interface:	*Code*		*Code*
Not included	0	CL	3
Mbus	1	MiniUS	4
MODBUS RS485	2		

Enclosure protection class:	*Code*		*Code*
IP65	1	IP68	3
IP67	2		

Extra inputs/output:	*Code*
YES	1
NO	2

Temperature ranges:	*Code*
0 °C … 90 °C	1
0 °C … 130 °C	2

Length of temperature sensors connection cable, m (not more 5 m), example 1,5 m

**Only for sensors with q_p=1,5 m^3/h; 2,5 m^3/h; 6,0 m^3/h; 10 m^3/h; 15 m^3/h*

2 TECHNICAL SPECIFICATIONS

2.1. Energy measurement

Accuracy class: 2 according to LST EN1434-1:2016.
Energy measurement units: kWh; MWh; GJ; Gcal
Maximum value of thermal power: 5.28 MW

2.2. Flow measurement

Ratio of the permanent flow rate to the lower limit of the flow-rate (selectable by the user):

$q_p/q_i = 100$,

or $q_p/q_i = 250$ (only for sensors with $q_p = 1.5$ m^3/h; 2.5 m^3/h; 6.0 m^3/h; 15 m^3/h)

The technical data of the flow sensor are provided in Table 1.1.

1.1 Table

Permanent flow rate q_p, m^3/h	Upper flow-rate q_s, m^3/h	Lower flow-rate q_i, m^3/h	Threshold value of flow rate, m^3/h	Length of the flow sensor L, mm	Pressure losses at q_p, kPa	Joining to the pipeline (Thread – G, flange–DN)
0.6	1.2	0.006	0.003	110	7	G3/4“
0.6	1.2	0.006	0.003	190	0.9	G1“ or DN20
1	2	0.01	0.005	110	11.3	G3/4“
1	2	0.01	0.005	190	2.5	G1“ or DN20
1.5	3	0.006	0.003	110; 165	17.1	G3/4“
1.5	3	0.006	0.003	190	5.8	G1“ or DN20
1.5	3	0.015	0.003	110; 165	17.1	G3/4“
1.5	3	0.015	0.003	190	5.8	G1“ or DN20
1.5	3	0.015	0.005	130	7.2	G1“
2.5	5	0.01	0.005	130	19.8	G1“
2.5	5	0.01	0.005	190	9.4	G1“ or DN20
2.5	5	0.025	0.005	130	19.8	G1“
2.5	5	0.025	0.005	190	9.4	G1“ or DN20
3.5	7	0.035	0.017	260	4	G1 1/4“, G1 1/2“, DN25 or DN32
6	12	0.024	0.012	260	10	G1 1/4“, G1 1/2“, DN25 or DN32
6	12	0.06	0.012	260	10	G1 1/4“, G1 1/2“, DN25 or DN32
10	20	0.04	0.02	300	18	G2“ or DN40
10	20	0.1	0.02	300	18	G2“ or DN40
15	30	0.06	0.03	270	12	DN50
15	30	0.15	0.03	270	12	DN50
25	50	0.1	0.05	300	20	DN65
25	50	0.25	0.05	300	20	DN65
40	80	0.16	0.08	300	18	DN80
40	80	0.4	0.08	300	18	DN80
60	120	0.24	0.12	360	18	DN100
60	120	0.6	0.12	360	18	DN100

Temperature limits of heat conveying liquid: 0.1 ^{o}C – 90 ^{o}C
(Custom-made, wall-mounted electronic unit: 0.1 ^{o}C – 130 ^{o}C)
Length of the connecting cable between the flow sensor and electronic unit: 1.2 m
(Custom-made: 2.5 m or 5.0 m)
Maximum admissible working pressure (nominal pressure PN): 16 bar or 25 bar

If the flow-rate exceeds the maximum value q_s:

– when the flow-rate < $1.2 \cdot q_s$, the flow-rate measurement and calculations are continued;

– when the flow-rate > $1.2 \cdot q_s$, calculations are performed using flow-rate value $1.2 \cdot q_s$, the error

“exceeded maximum flow-rate” is recorded and the duration of that error is calculated.

2.3. Pulse inputs (additional)

– the number of pulse inputs: 2
– indicated units: m^3

– pulse value: programmable
– input pulse types: IB according to LST EN1434-2
– maximum permissible frequency of input pulses: 3 Hz
– maximum permissible voltage of input pulses: 3.6 V
– condition of maintenance of high level: 3.6 V through 3.3 MΩ resistor
– if the meter is ordered with the pulse input-output function, then a permanently connected 1.5m long cable is fitted in the meter for connecting the inputs-outputs.

2.4. Temperature measurement

Temperature measuring range: 0 °C – 90 °C.
(Custom-made: 0 °C – 130 °C)
Temperature difference measuring range: 2 – 90 K or 3 – 70 K
(Custom-made: 2– 130 K or 3 – 110 K)

Temperature sensor design:
DS type according to LST EN1434-2 (when the flow sensor connection type is G3/4, G1 or G11/4),
PL type according to LST EN1434-2 (for other flow sensor connection types).
Connected cable length: up to 10 m.

2.5. Display

A liquid crystal, 8-digit display for the representation of the values of the indicated parameter and for the representation of parameters, units of measurement, and operating modes with special symbols. Integral and instantaneous measured parameters as well as data read from the meter archive and configuration information specified in Paragraph 6.3 are displayed.
Energy measurement units (selectable by the user when installing): kWh, MWh, Gcal, or GJ
Resolution of energy indicators (selectable by the user when installing): 0000000.1 kWh,
00000001 kWh,
00000.001 MWh (Gcal or GJ)
000000.01 MWh (Gcal or GJ)

Resolution of flow-rate indicators: 00000.001 m^3

In the case of battery discharge or disconnection, all integral readings and archive data shall be saved for at least 15 years and can be accessed by connecting a power battery in the operating condition.

2.6. Data recording and storage

In its memory, the meter accumulates an archive of hourly, daily, and monthly-measured parameters. Archive data can be read only by remote data reading means (see Paragraph 6.5). The monthly data archive parameters which are also additionally showed on the display are specified in Paragraph 6.3.1.
The following parameters of each hour, day, and month are accumulated in the memory of the meter:

1	Integral energy
2	Integral cooling energy
3	Integral energy, Tariff 1
4	Integral energy, Tariff 2
5	Integral heat carrier volume
6	Integral value of Pulse Input 1
7	Integral value of Pulse Input 2
8	Value and date of the maximum power
9	Minimum (or maximum cooling) power value and date
10	Value and date of the maximum flow-rate
11	Supply heat carrier maximum temperature value and date
12	Return heat carrier maximum temperature value and date
13	Supply heat carrier minimum temperature value and date
14	Return heat carrier minimum temperature value and date
15	Minimum recorded temperature differential and date
16	Supply heat carrier average temperature value
17	Return heat carrier average temperature value
18	No-energy operation calculation error time
19	Summary error code
20	Time when flow-rate exceeded 1.2 qs
21	Time when flow-rate was below qi

Archive capacity, minimum:

Hours for archive records:	1480 h
Days for archive records:	1130 days
Months for archive records:	36 months
Archive data storage time:	at least 36 months

Time of storage of all measured integral data, also without power supply to the electronic unit: at least 15 years

2.7. External communication interfaces

Optical interface (always included, irrespective of the order)

Ordered interface (to be specified when ordering the meter; both options can be selected):

Mbus interface
RF 868MHz interface

Additional interface (depending on the order; only one option from the list is possible):

M-Bus interface
CL (current loop) interface
MODBUS RS485 interface
MiniBus interface

The interfaces are intended for data reading and meter parametrisation. When the meter is configured for being powered only from the internal battery, the time of communication through the additional interfaces is automatically limited to save the battery – 16 hour per month on an average. Unused communication limit is summed up. If the limit is used out, the interface is locked and the summing-up of a new limit will start only after the change of the hour (80 seconds each hour).

For wired interfaces, a permanently connected 1.5 m length cable is included in the meter.

The optical interface is integrated in the front panel of the electronic unit and is intended for data reading in Mbus protocol, meter parametrisation, and output of optical pulses in the test mode. It is activated by pressing the button (5 minutes after the end of communication, or is automatically disabled after pressing the button).

2.8. Pulse outputs

Number of pulse outputs:	2 or no (to be specified when ordering)
Class:	OB – in the operating mode; OD – in the test mode
Type:	open collector;
permissible current:	up to 20 mA;
voltage:	up to 50 V
Pulse duration:	125 ms – in the operating mode; 1.2 ms – in the test mode

Pulse value in the operating mode:

– When the output is configured for energy, the value of its pulses can be selected from the list (depending on the rated flow qp and energy measurement units):

Permanent flow rate, q_p, m^3/h	0.6 – 6	10 – 60
Energy pulse value, when units are “kWh” or “MWh”	0.001; 0.01; 0.1; 1 MWh/imp	0.01; 0.1; 1 MWh/imp
Energy pulse value, when units are “GJ”	0.001; 0.01; 0.1; 1 GJ/imp	0.01; 0.1; 1 GJ/imp
Energy pulse value, when units are “Gcal”	0.001; 0.01; 0.1; 1 Gcal/imp	0.01; 0.1; 1 Gcal/imp

– When the output is configured for water quantity, the value of its pulses can be selected from the list (depending on the permanent flow qp):

Permament flow rate, q_p, m^3/h	0.6 – 6	10 – 60
Water volume pulse value, m3/imp	0.001; 0.01; 0.1; 1	0.01, 0.1, 1

– if the meter is ordered with the pulse input-output device, then a permanently connected 1.5 m length cable is fitted in the meter for connecting the inputs-outputs.

2.9. Meter power supply
(one of the options, depending on the meter configuration):
- one or two internal AA-size 3.6 V lithium (Li-$SOCl_2$) batteries with a service life of at least 15+1 years,
- or an external 12–42 V DC or 12–36 V 50/60 Hz AC voltage; consumption current not more than 20 mA,
- or an external 230 V +10% -15% 50/60 Hz AC voltage; consumption current not more than 5 mA.

2.10. Overall dimensions:

electronic unit:	maximum 115 mm x 30 mm x 90 mm,
flow sensors**:**	according to Annex B

Weight of the meter:

Connection type (and length) of the flow sensor	Weight of the meter, maximum, kg
G3/4“ (110 mm)	0.7
G3/4“ (165 mm)	0.8
G1“ (110 mm)	0.7
G1“ (130 mm)	0.8
G1“ (190 mm)	0.9
DN20 (190 mm)	2.5
G1 ¼“	3.2
G1 1/2“	3.3
DN25	5.6
DN32	6.0
G2“	3.7
DN40	6.8
DN50	8.5
DN65	13
DN80	15
DN100	18

2.11. Operation conditions

Electronic unit protection class:	IP65 (IP67 or IP68, custom-made)
Flow sensor protection class:	IP65 (IP67 or IP68, custom-made)
Temperature sensors protection class;	IP68
Operating conditions:	
– ambient temperature	5 ^{o}C to 55 ^{o}C;
– relative humidity	up to 93 %,
– atmospheric pressure	86 kPa to 106.7 kPa
Mechanical environment class:	M1
Electromagnetic environment class:	E2.

3 OPERATING PRINCIPLE

The flow-rate is measured on the basis of the ultrasonic measurement principle. The ultrasonic signal is sent along the flow sensor upstream and downstream between the ultrasonic sensors, which alternately perform transmitter and receiver functions. The flow rate is calculated on the basis of the measured propagation time difference (downstream and upstream).

The temperature differential between the supply and return flows is measured by resistive temperature sensors. The electronic unit calculates the amount of consumed heat energy by integrating over time the difference of the enthalpies of supply and return heat carrier and provides the data on the display.

Energy calculation formulas:

– when the flow sensor is in the supply line

$$Q = V * \cdot \rho_1 * (h_{T1}-h_{T2})$$

– when the flow sensor is in the return line

$$Q = V * \rho_2 * (h_{T1}-h_{T2})$$

Where: Q – heat energy;

V – the volume of water passing through the meter, m^3;

ρ_1, ρ_2 – the water density corresponding to the supply and return heat carrier temperatures

Θ1 and Θ2 measured by the supply and return water temperature sensors T1 and T2;

h_{T1}, h_{T2} – the calculated specific enthalpy of the heat carrier for the temperatures Θ1 – Θ2.

When the cooling energy tariff function is activated, in case of a negative temperature differential, energy will be accumulated in the additional tariff register $Q_{☼}$. In this case, energy values are calculated according to the following formulas:

– when the flow sensor is in the supply line

when Θ1 > Θ2: $Q = V \cdot \rho_1 \cdot (h_{T1} - h_{T2})$, $Q_{☼} = 0$

when Θ1 < Θ2: $Q_{☼} = V \cdot \rho_1 \cdot (h_{T2} - h_{T1})$, $Q = 0$

– when the flow sensor is in the return line

when Θ1 > Θ2: $Q = V \cdot \rho_2 \cdot (h_{T1} - h_{T2})$, $Q_{☼} = 0$

when Θ1< Θ2: $Q_{☼} = V \cdot \rho_2 \cdot (h_{T2} - h_{T1})$, $Q = 0$

The electronic unit of the heat meter performs all necessary measurement and data storage functions:

- the measurement of heat energy and determination of overload characteristics;
- the calculation and storage of maximum values;
- the storage of data necessary for reports for a day set yearly and monthly;
- the measurement of consumption under tariffs;
- the storage of 36-month values, including the calculated energy, volume, and tariff register;
- the determination of errors;
- the display of values, parameters (displayed selectively), and error codes;
- the test and service functions.

4 MARKING AND SEALING

4.1. Marking

The following is indicated on the front panel of the electronic unit of the meter: the manufacturer's trade mark, type and the type-number of the meter, EU – type examination certificate number, factory number, year of manufacture, temperature measurement range, temperature difference measurement range, accuracy, environmental class according to LST EN1434-1, electromagnetic and mechanical environment class, flow measurement range (qi, qp, qs), temperature range for the sensors, maximum allowable working pressure and the distributor's mark (if applicable), types of communication interfaces (excluding optical ones), and supply voltage (in the case of external power supply).

The following is indicated on the housing of the flow sensor:

– the type of connection (thread or relative diameter);

– the flow direction.

Destination of wire communication interfaces , additional inputs and outputs, and wires of external power cables is marked with the colour of the cable wires and an additional label on the cable indicating the destination.

The temperature sensor intended for mounting in the higher-temperature pipeline is marked with a red marking pipeline sign; that intended for mounting in the lower-temperature pipeline is marked with a blue pipeline sign.

4.2. Sealing of the meter (Annex C)

4.2.1. Sealing of the calculator of the heat meter

No additional sealing applies to the electronic unit of a newly manufactured heat meter. Access to elements fixing the opening of the box, configuration change activation contacts, and adjustment data change activation contacts is protected by special easily breakable partitions (Fig. 4.1).

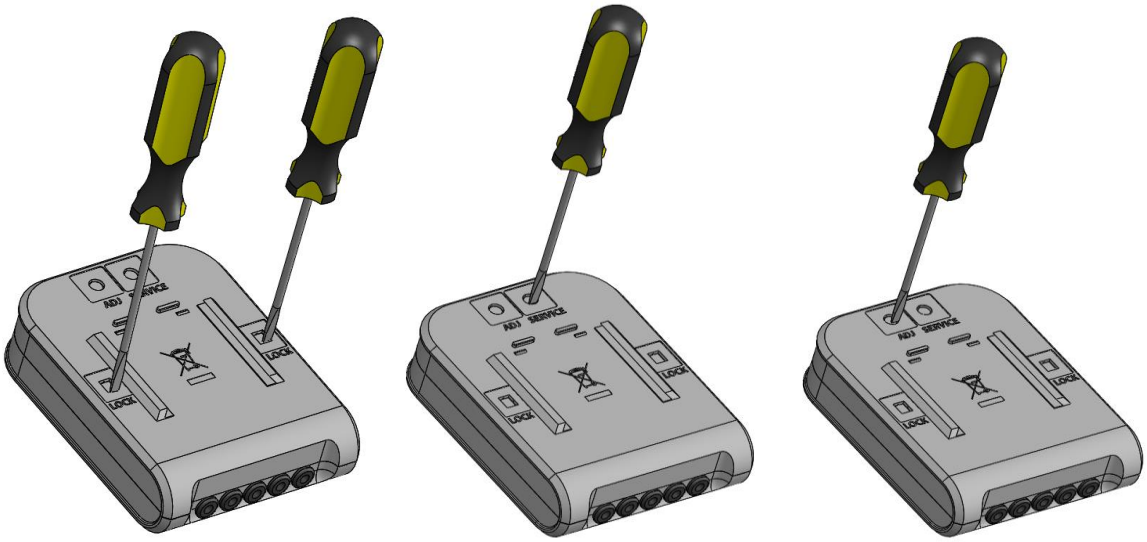

a) b) c)

Fig. 4.1 Access to elements fixing the opening of the box (a), configuration change activation contacts, and adjustment data change activation contacts (c) (partitions easily breakable with a tool)

After the opening of the box, change of the configuration, or adjustment of the meter (when the special partitions were broken out for this purpose), the opened slots must be additionally sealed with sticker seals:

- the two slots marked LOCK for access to the elements fixing the opening of the box are sealed with test sticker seals (Fig. 4.1a),
- the slot marked SERVICE for access to the configuration change activation contacts is sealed with the supplier's sticker seal (Fig. 4.1b),
- the slot marked ADJ for access to the adjustment data change activation contacts is sealed with the supplier's sticker seal (Fig. 4.1c).

4.2.2. Sealing of the flow sensor of the heat meter.

The manufacturer's warranty sticker seal is attached – the protective cap fastening screws are sealed (Fig. C2, pos. 1).

4.2.3. After installation, the temperature sensor fastening screw is sealed with mounting seals (Fig. C3).

5 INSTALLATION PROCEDURE

5.1. General requirements

Prior to installing the meter, it is necessary:

- to check the complete set of the meter with that specified in the technical documentation;
- to check for any visible mechanical defects;
- to check the configuration of the meter and to change it if necessary.

The meters may only be installed by qualified specialists in accordance with the requirements of this document and the meter installation design.

It is prohibited to lay signal wires near (closer than 5 cm from) power cables or cables of other devices.

5.2. Check of the configuration of the meter

5.2.1. Prior to installing the meter, it must be verified whether its configuration complies with the requirements for the specific facility and it must be changed if necessary (if the meter is in the transport mode, the configuration can also be changed by the press-button, without damaging the meter structure or seals). The following parameters are verified (the factory settings for the meter are their standard ones):

- whether the meter is intended to be installed in a supply or return pipe;
- whether the meter is intended to measure heat energy or heat and cooling energy;
- energy measurement units;
- displayed energy resolution (point position);

- whether the tariff registers are activated and the functioning conditions of the tariff registers;
- whether the pulse inputs are activated, their purpose, pulse values, initial values of their volume registers, and volume register resolution (point position);
- whether the pulse outputs are activated, their purpose, pulse values, initial values of their volume registers, and volume register resolution (point position);
- the reporting year and month date;
- the subscriber number;
- the internal clock time;
- Mbus interface addresses and communication speed.

Note. The transport mode will turn off automatically (the possibility to change configuration parameters will be turned off) when the meter starts operation and the volume integrator has accumulated more than 1 litre.

5.2.2. Procedure for the review of the configuration of the meter:

- If the meter is in the transport mode, its display is off in the stand-by state. The display is turned on by pressing the button and, as long as the meter is in the transport mode, it will turn off after 5 minutes (in the normal operation mode, the display is constantly on and constantly shows the value of measured energy):

00000.000 **MWh**
INT

- For the review and change of the configuration, press and hold down the button until INF turns on at the bottom of the LCD. The parameter is selected by shortly pressing the button (and is changed if necessary):

LCD image	Parameter	Possibility to change
↔ 0.000 kW **INF**	Heat capacity	
↔ **m³h** 0.000 **INF**	Flow-rate	
1 ↔ 0 °C **INF**	Temperature T1	
2 ↔ 0 °C **INF**	Temperature T2	
1-2 ↔ 0.0 °C **INF**	Temperature differential T1-T2	
↔ SEt. 0.000 MWh **INF** ☼	Installation place Heat or heat/cooling meter Energy measurement units and point position	Yes* Yes* Yes*
↔ b: 2027.03 **INF**	Battery service life end date	Yes
↔ 2017.07.24 **INF**	Date (year.month.day)	Yes
↔ 15-07-32 **INF**	Time (hour-minute-second)	Yes

↔ --. 01. 31 INF	Reporting date of the year (month.day)	Yes
↔ --. --. 31 INF	Reporting day of the month	Yes
1 L1 0.0 °C INF MAX	Parameter of the 1st tariff Parameter value Parameter condition	Yes
1 L2 0.0 °C INF MAX	Parameter of the 2nd tariff Parameter value Parameter condition	Yes
1 ↔ m^3 In 0.001 INF	Mode of the 1st pulse input/output Pulse value	Yes
2 ↔ m^3 In 0.001 INF	Mode of the 2nd pulse input/output Pulse value	Yes
1 ↔ m^3h 00000.000 INF	Initial reading of the 1st pulse input Point position of the 1st pulse input	Yes*
2 ↔ m^3h 00000.000 INF	Initial reading of the 2nd pulse input Point position of the 2nd pulse input	Yes*
1 ↔ buSA 1 INF	Initial address of M-bus protocol of the 1st wire interface	Yes**
1 ↔ 2400E bPS INF	Communication speed of the 1st wire interface, bits per second (E – parity Even)	Yes**
2 ↔ buSA 1 INF	Initial address of M-bus protocol of the 2nd wire interface	Yes**
1 ↔ 2400E bPS INF	Communication speed of the 1st wire interface, bits per second (E – parity Even)	Yes**
↔ H: ---- INF	Heat carrier type (---- - water)	
↔ C: 0000000 INF	Subscriber number	Yes
↔ SoFt 0.01 INF	Software version number	
↔ 00000000 INF	Meter factory (serial) number	
↔ 0000000.0 h	Error-free meter operation time	

INF		
←→ b:0000000 h INF	Total operation time of the meter	
←→ tESt on Wh INF	For activating the test mode and the output of energy pulses through the optical interface	Yes**
←→ m^3 tESt on INF	For activating the test mode and the output of volume pulses through the optical interface	Yes**
←→ InStALL INF	For activating the RF interface installation mode by the press-button (press and hold)	Yes**

Notes.
1) The symbol ←→ shows that the meter is in the transport mode.
2) *the marked parameters are displayed only in the transport mode
3) **the marked parameters can also be changed in the normal operation mode

5.2.3. Change of the configuration of the meter
The parameters marked in Paragraph 5.2.1 can be changed using the configuration programme HEAT3_service or by the button. If the transport mode is turned off in the meter, to change parameters, the slot SERVICE should be opened at the back of the electronic unit by breaking the partition and to short-circuit the contacts inside (after configuration, the slot must be sealed with a sticker seal).

6.3. Electrical wiring
If the meter is to be powered from an external 230V AC or 24V AC/DC source, the cable of the meter intended for the purpose and respectively marked is connected to the respective source (see Annex A).

If the meter is completed with wire interfaces or the pulse input/output function, the cables intended for the purpose and respectively marked are connected to the respective external appliance (see Annex A).

6.4. Installation

Mounting of the calculator

The electronic unit (calculator) of the meter is mounted in a heated room. The temperature of the working environment should not be higher than 55 ^{o}C. It may not be exposed to direct sunlight.

No special requirements are established for the free space around the meter. It is important that nearby installations or structures do not rest against the housing of the meter, do not hinder the laying of cables and reading of data on the display. The meter should be installed at a safe distance from other devices emitting heat or strong electromagnetic field (in order to prevent the disturbance of its working environment conditions).

The electronic unit is mounted on an auxiliary holder (it can be oriented in the required direction at an angle of each 90 ^{o}:

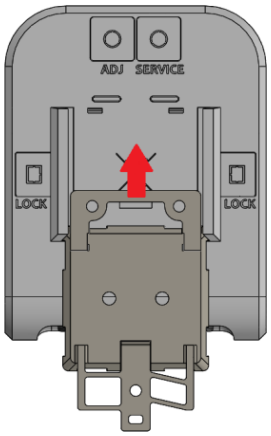

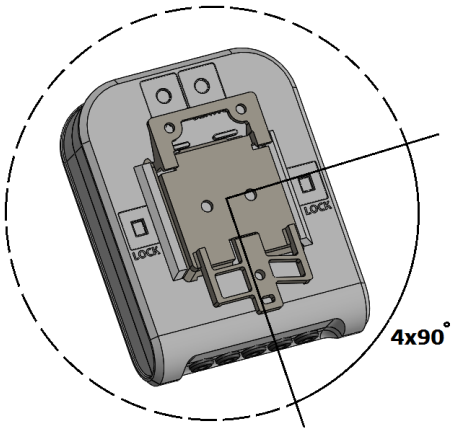

The possible ways of the mounting of the electronic unit (auxiliary holder):
- Direct mounting on the housing of the flow sensor, by turning each 90° (only when the flow temperature does not exceed 90 ^{o}C):

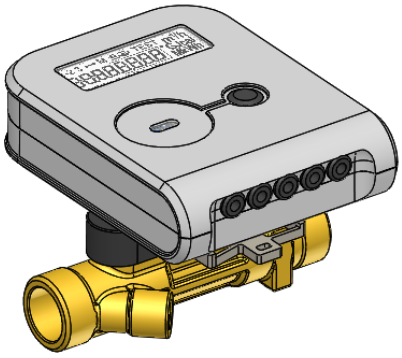

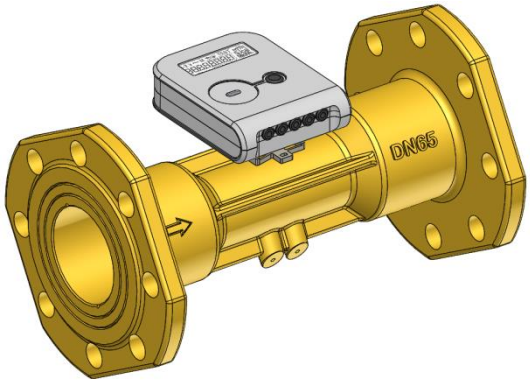

- On a wall:

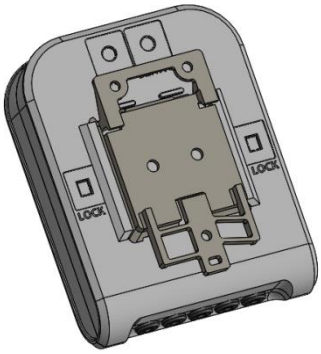

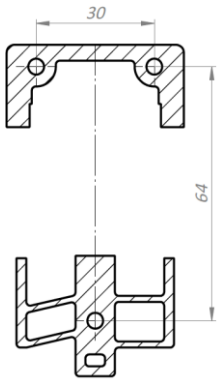

- In the electrical equipment cabinet, on a standard DIN rail:

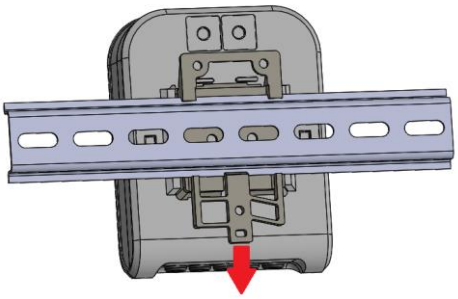

! ***Important:*** *It is prohibited to attach the electronic unit directly on the wall because there is a risk that moisture may condense on the walls of the room or the temperature of the surface of the wall may drop below 5 ^{o}C. In this case, it is recommended to mount the electronic unit so that to provide for an air space of at least 5 cm between the unit and the wall surface.*

Mounting of flow sensors

The installation and overall dimensions of the primary flow sensors are provided in Annex B.

When installing in a pipeline, the following lengths of straight sections are required for sensors connected by flanges DN65, DN80, and DN100: upstream the sensor – at least 5DN; downstream the sensor – at least 3DN. No straight sections are required for flow sensors of other connection types either upstream or downstream the meter.

It is recommended to install flow sensors in pipelines as far as possible from pumps, partitions, and elbows.

Flow sensors may be installed horizontally, vertically, or in a slope. Mandatory condition: in the operating mode, the pipe must have a pressure of not less than 30 kPa and the pipe must be fully filled with water.

In respect of the longitudinal axis of the pipe, flow sensors with the connection type G3/4, G1, or DN20 may be mounted at any angle (Fig. 5.1 a); flow sensors of other connection types can be mounted in the positions specified in Fig. 5.1b (it is not allowed when the flow sensor cover is oriented in a vertical position).

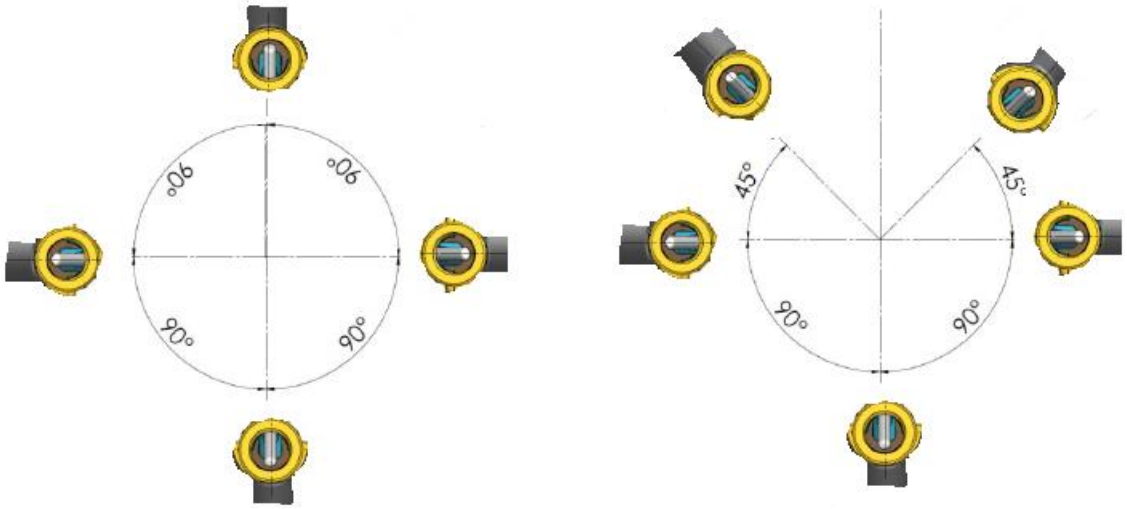

a) With connection type G3/4, G1, or DN20 b) for other connection options

Fig. 5.1 Allowed installation positions of the flow sensor

The flow direction and the direction of the arrow on the flow sensor must coincide.

The flow sensor can be installed either on the supply or return line, depending on the indication on the label of the meter.

Prior to installing the sensor, the pipeline of the heating system must be flushed at the place of the installation of the sensor.

In order to avoid stresses in the pipelines, the distance between the flanges at the flow sensor installation place shall correspond to the total length of the sensor with regard to the thickness of gaskets.

It is recommended to select the flow sensor installation place as far as possible from potential sources of vibration (for example, pumps).

When installing the sensors, attention should be paid to the gaskets in order to ensure that they do not protrude inward the pipeline.

It is prohibited to lay the wires of the flow sensor near (closer than 5 cm from) power cables or cables of other devices.

Installation of temperature sensors

Temperature sensors are installed with their placement heads upward, perpendicularly to the pipe axis or at an angle of 45° to the fluid flow direction so that the sensing element is immersed in the medium being measured at least to the pipe centreline (see in the figures in Annex C). When the meter is fitted with flow sensors with flanges G3/4“, G1“, and G1 ¼“, one temperature sensor is installed in the housing of the flow sensor.

It is prohibited to lay the wires of the temperature sensors near (closer than 5 cm from) power cables or cables of other devices.

Check of installation and parameter setting

If the meter (calculator, flow and temperature sensors) is installed correctly, when there is flow, the display of the meter should represent the flow and temperature readings. In case the readings of the measured channels are not displayed, the installation of electrical circuits must be checked.

6 OPERATION PROCEDURE

6.1.Control

The representation of measured and information data on the display is selected by the control button located on the upper part of the electronic unit.

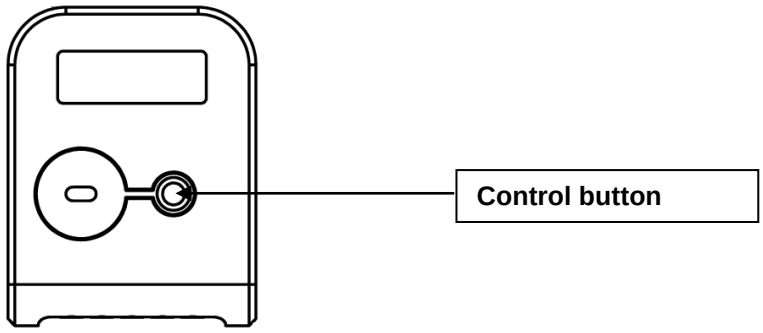

6.2.Representation of data

Data are displayed on a liquid crystal, 8-digit display with special symbols for the representation of parameters, units of measurement, and operating modes:

When the flow flowing (in the right direction), it is represented by an arrow →; when the flow flowing in the opposite direction, it is represented by the arrow ←. When there is no flow, no arrow is displayed. The purpose of other symbols is described in Sections 6.3.1 – 6.3.3.

This following information can be displayed:

- the values of the integral and instantaneous measured parameters (when the symbol **INT** is displayed),
- the data of monthly archives and data of the reporting day (when the symbol **BIL** is displayed),
- information on the configuration of the device (when the symbol **INF** is displayed).

The consumed heat energy is displayed constantly. Other data are represented on the display in a sequence with the use of the control button.

When the meter is configured for the installation in the supply line, the symbol is displayed; when the meter is configured for the installation in the return line, the symbol is displayed.

The symbol ⚠ is shown when there is a significant meter operation error (due to which the summing-up of energy or normal working time is suspended). For the error code, see the LCD menu item 1.12 (Paragraph 6.3).

6.3. Menu structure

The diagram of the review of readings of the electronic unit in the operating mode is shown in Fig. 6.1. The main integral readings (1.2) or error (1.1) will always be shown if the button was not pressed for more than 60 seconds.

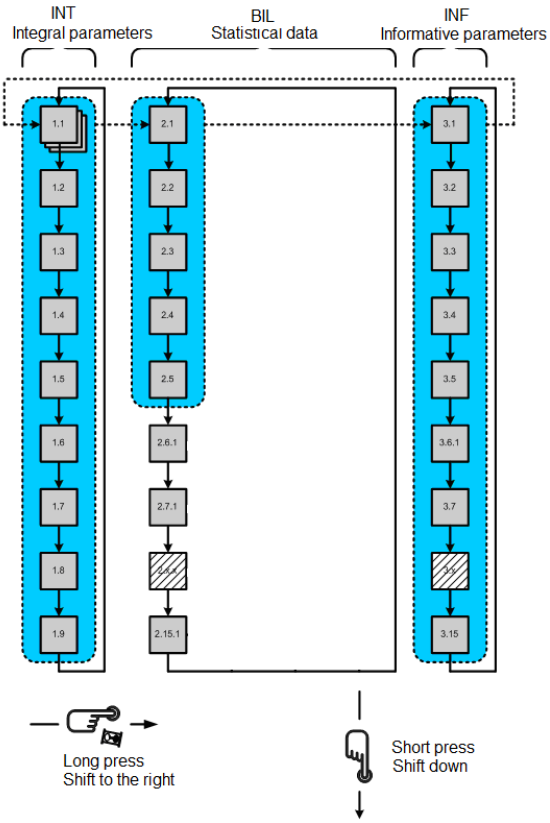

Fig. 6.1 The diagram of the review ot readings in the operating mode.

6.3.1. Viewing the readings in the operating mode (User Menu)

Note: This is a complete list of represented parameters. It can be shortened at a specific meter for the convenience of the user.

ID	Parameter	Value	Notes
1.1	Integral heating energy	00000.000 MWh INT	
1.2	Integral cooling energy	00000.000 MWh INT ☼	
1.3	Integral energy, Tariff 1	1 00000.000 MWh INT	In the case of a combined device, the “snowflake” shows that the tariff is linked with a cooling energy meter
1.4	Integral energy, Tariff 2	2 00000.000 MWh INT	In the case of a combined device, the “snowflake” shows that the tariff is linked with a cooling energy meter
1.5	Integral heat carrier volume	m^3 00000.000 INT	
1.6	Integral volume of Pulse Input 1	1 m^3 00000.000 INT	
1.7	Integral volume of Pulse Input 2	2 m^3 00000.000 INT	
1.8	Segment test	1-2 3 ↔ M TEST m³/h 8.8.8.8.8.8.8.8 °C GJcal MkWh INT BIL INF MAX MIN ❄ ⚠	changes every second
1.9	No-energy operation calculation error time	000000.00 h INT	
1.10	User identification number	C:0000000 INT	Matches the secondary address of MBus interface
1.11	Check number	0000 INT	
1.12	Error code and error beginning date	Er: 0001 INT 2017.01.01 INT	When there is no error, it only shows Er: 0000 When there is critical error, the images changes every second: error code and error beginning date The error code values are explained in Paragraph 6.3.3

2.1	Settlement day integral energy and date	00000.000 MWh BIL 2017.01.01 BIL	Changes every second
2.2	Settlement day integral cooling energy and date	00000.000 MWh BIL ☼ 2017.01.01 BIL	Changes every second
2.3	Settlement day integral Tariff 1 energy and date	1 00000.000 MWh BIL 2017.01.01 BIL	Changes every second
2.4	Settlement day integral Tariff 2 energy and date	2 00000.000 MWh BIL 2017.01.01 BIL	Changes every second
2.5	Settlement day integral heat carrier volume and date	m^3 00000.000 BIL 2017.01.01 BIL	Changes every second
2.6	Settlement day integral pulse input 1 value and date	1 m^3 00000.000 BIL 2017.01.01 BIL	Changes every second
2.7	Settlement day integral pulse input 2 value and date	2 m^3 00000.000 BIL 2017.01.01 BIL	Changes every second

2.8	Previous month integral energy and date	M 00000.000 MWh BIL 2017.01.01 BIL	Changes every second
2.9	Previous month integral cooling energy and date	M 00000.000 MWh BIL ☼ 2017.01.01 BIL	Changes every second
2.10	Previous month integral Tariff 1 energy and date	1 M 00000.000 MWh BIL 2017.01.01 BIL	Changes every second
2.11	Previous month integral Tariff 2 energy and date	2 M 00000.000 MWh BIL 2017.01.01 BIL	Changes every second
2.12	Previous month integral heat carrier volume and date	M m^3 00000.000 BIL 2017.01.01 BIL	Changes every second
2.13	Previous month integral pulse input 1 value and date	1 M m^3 00000.000 BIL 2017.01.01 BIL	Changes every second
2.14	Previous month integral pulse input 2 value and date	2 M m^3 00000.000 BIL 2017.01.01 BIL	Changes every second

2.15	Previous month maximum power value and date	M 0.000 kW BIL MAX 2017.01.01 BIL	Changes every second
2.16	Previous month minimum (or maximum cooling) power value and date	M 0.000 kW BIL MIN 2017.01.01 BIL	Changes every second
2.17	Previous month maximum flow-rate value and date	M m^3/h 0.000 BIL MAX 2017.01.01 BIL	Changes every second
2.18	Previous month supply heat carrier maximum temperature value and date	1 M 0.0 °C BIL MAX 2017.01.01 BIL	Changes every second
2.19	Previous month return heat carrier maximum temperature value and date	2 M 0.0 °C BIL MAX 2017.01.01 BIL	Changes every second
2.20	Previous month maximum recorded temperature differential	1-2 M 0.0 °C BIL MAX 2017.01.01 BIL	Changes every second
2.21	Previous month supply heat carrier minimum temperature value and date	1 M 0.0 °C BIL MIN 2017.01.01 BIL	Changes every second

2.22	Previous month return heat carrier minimum temperature value and date	2 M 0.0 °C BIL MIN 2017.01.01 BIL	Changes every second
2.23	Previous month minimum recorded temperature differential and date	1-2 M 0.0 °C BIL MIN 2017.01.01 BIL	Changes every second
2.24 – 2.590	Recorded data and dates of previous months, similarly to 2.8 – 2.23 (up to 36 previous months)		When installing the meter, the selection can be set to the indication of the readings of only the last, two last, or all 36 months*
3.1	Thermal power	0.000 kW INF	
3.2	Heat carrier flow rate	m^3h 0.000 INF	
3.3	Supply heat carrier temperature	1 0 °C INF	
3.4	Return heat carrier temperature	2 0 °C INF	
3.5	Temperature difference	1-2 0.0 °C INF	
3.6	Next battery replacement date	b: 2027.03 INF	
3.7	Device current date (real-time calendar)	2017.07.24 INF	
3.8	Device current time (real time)	15-07-32 INF	
3.9	Reporting date of the year	↔ --. 01. 31 INF	
3.10	Reporting day of the month	↔ --. --. 31 INF	

3.11	Tariff 1 configuration	Example of Tariff 1, when T1-T2 is < 10.0 °C: 1-2 L1 10.0 °C INF MAX when >10.0 oC: 1-2 L1 10.0 °C INF MIN when within the range from 10.0 to 40.0°C (changes every 1 second): 1-2 L1 10.0 °C INF MIN 1-2 L1 40.0 °C INF MAX when the time interval is set in hours (07-23 h): 1-2 L1 07-23 h INF MAX when the tariff is directly activated by the pulse input: 1-2 L1 07-23 h INF MAX	Possible setting: One of measured parameters, 1 or 2 pulse input (if it is configured as an input), one of the temperatures, or temperature differential.
3.12	Tariff 2 configuration	Similarly to Tariff 1, only “L1” changes to “L2”	Similarly to Tariff 1
3.13	1st pulse input/output configuration	Input (volume pulses): 1 m3 In 0.001 °C INF Input (tariff activation): 1 m3 In L2 INF Output (energy): 1 out 0.001 MWh INF Output (tariff status): 1 out L1 INF	Inputs can be configured to control only the water quantity (the maximum pulse resolution is indicated on the screen 0.00001 m3) or control one of the tariffs. Outputs can be configured for the water quantity (m3), heating (illlustrated case) or cooling (additionally – snowflake) energy or output of the status of one of the tariffs
3.14	2nd pulse input/output configuration	Similarly to the 1st pulse input/output, only “1” changes to “2”	Similarly to the 1st pulse input/output

3.15	Wire interface MBus 1 address	1 buSA 1 INF	
3.16	Wire interface MBus 1 speed	1 2400E bPS INF	Bits per second. “E” – parity Even
3.17	Wire interface MBus 2 address	2 buSA 1 INF	When a second wire interface is also included
3.18	Wire interface MBus 2 speed	2 2400E bPS INF	When a second wire interface is also included Bits per second. “E” – parity Even
3.19	Heat carrier type	H: ---- INF	heat carrier type “----” – water
3.20	User identification number	C: 0000000 INF	Transmitted in MBus telegrams
3.21	Device programme version number	SoFt 0.01 INF	
3.22	Device factory number	00000000 INF	
3.23	No-energy operation calculation error time	0000000.0 h INF	
3.24	Battery working time	b:0000000 h INF	
3.25	For activating the test mode and the output of energy pulses through the optical interface	tESt on Wh INF	Protected by password (look at 6.4.2)
3.26	For activating the test mode and the output of volume pulses through the optical interface	m^3 tESt on INF	Protected by password (look at 6.4.2)
3.27	For activating the RF interface installation mode by the press-button (press and hold)	InStALL INF	Protected by password (look at 6.4.2)

The indication of irrelevant parameters can be turned off. Also, parameters that are not relevant to the set meter configuration will not be indicated.

The indication of parameters can be turned on or off by means of the configuration programme HEAT3-SERVICE through the optical interface when installing the meter (if the meter is in the transport mode) or connecting the jumper SERVICE at any time.

6.3.2. Viewing of calculator readings in the test mode

The diagram of the review of calculator readings in the test mode is shown in Fig. 6.2.

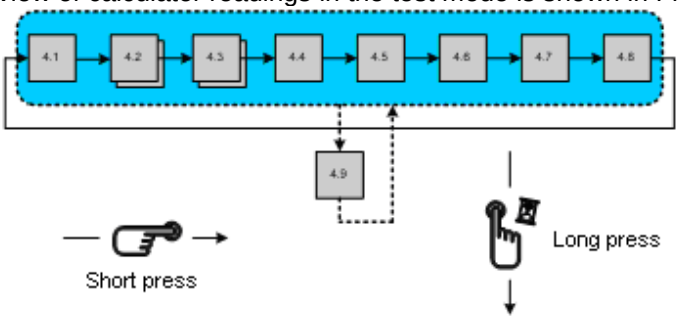

Fig. 6.2. The diagram of the review of electronic unit readings in the test mode.

Display readings in the test mode

ID	Parameter	Value	Notes
4.1	High- resolution energy	TEST 000000.00 Wh	Updated every second. Indicated as “Pulse Wh”, if the energy test pulse output is activated (“Pulse m”^{3} – in the case of volume pulse output)
		TEST PULSE Wh	
4.2	High-resolution integrated volume	TEST m^3 00.000000	Updated every second. Indicated as “Pulse Wh”, if the energy test pulse output is activated (“Pulse m”^{3} – in the case of volume pulse output)
		TEST PULSE Wh	
4.3	Supply heat carrier temperature value	1 TEST 0.0 °C	
4.4	Return heat carrier temperature value	2 TEST 0.0 °C	
4.5	Temperature difference	1-2 TEST 0.00 °C	
4.6	High-resolution flow rate	TEST m^3h 0.000 INF	
4.7	To activate energy pulses output (when volume pulse output is active)	TEST tESt on Wh	Activated by pressing and holding the button
	To activate volume pulse output (when energy pulse output is active)	TEST m^3 tESt on	Activated by pressing and holding the button
4.9	To deactivate the test mode	TEST tESt OFF	Deactivated by pressing and holding the button
4.9	SF” and the flow-rate value are indicated if volume simulation has been started*	TEST m^3/h SF 1.500	changes every second by with selected parameter

*volume pulse simulation is only possible when the TEST mode is activated by short-circuiting the contacts SERVICE. Flow simulation is started by pressing and holding the button. After its end (in 2.5 minutes), the values of the simulated flow quantity and energy corresponding to it are recorded.

6.3.3. Error codes

Errors are encoded by a 4-digit code.

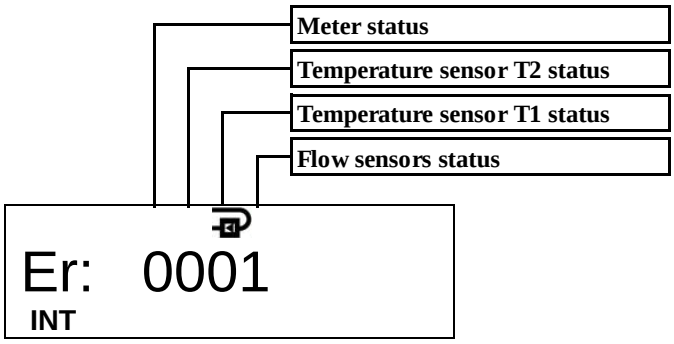

Code name	Description
Status of calculator Er: 0001 INT	0 - normal operation 1 - battery service life has expired (or in the meter was not power suppy – when meter is powering externaly) 2 - temperature differential is higher than permissible limits 4 - temperature differential is lower than permissible limits 8 - electronic unit hardware failure *
Status of the return heat carrier temperature sensor (T2) Er: 0001 INT	0 - normal operation 4 - the sensor is short-circuited * 8 - the sensor is disconnected or short-circuited *
Status of the supply heat carrier temperature sensor (T1) Er: 0001 INT	0 - normal operation 4 - the sensor is short-circuited * 8 - the sensor is disconnected or short-circuited *
Status of the flow sensor Er: 0001 INT	0 - normal operation 1 – no signal; the flow sensor is not filled with water 2 – reverse flow 4 – the flow is greater than $1.2 \cdot q_s$ (indicated $q=1.2 \cdot q_s$) 8 – hardware failure *

* - only in case of these serious errors will be stopped the summation of energy and normal working time, the error code will be displayed on the LCD first page, additionally the error date will be displayed.

Error codes sum up if there are more than one error. Then the summary indicated error code will be as follows:

3 – corresponds to error codes 2 + 1
5 – corresponds to error codes 4 + 1
7 – corresponds to error codes 4 + 2 + 1
9 – corresponds to error codes 8 + 1
A – corresponds to error codes 8 + 2
B – corresponds to error codes 8 + 2 + 1
C – corresponds to error codes 8 + 4
D – corresponds to error codes 8 + 4 + 1
E – corresponds to error codes 8 + 4 + 2
F – corresponds to error codes 8 + 4 + 2 + 1

If at least one digit value of an error code is ≥8, the summing-up of energy, water quantity, and trouble-free operation time is stopped.

In case of the flow sensor error 4, the time “when the flow $q > 1.2 \cdot q_s$” is recorded additionally.

6.4. Test mode control

6.4.1. Test mode (TEST) is intended for quick testing. In the test mode, the meter:

- indicates the increased resolution energy and flow values;
- forms energy or volume pulses through the optical interface;
- forms energy pulses at the 1st pulse output and volume pulses at the 2nd pulse output (when the meter is fitted with a pulse input/output cable);
- can simulate water volume for determining the energy measurement error tolerance.

The resolution of energy and flow-rate indicators in the test mode (TEST) is presented in Table 6.1.

Table 6.1

Selected energy measurement units	kWh, MWh	GJ	Gcal
Resolution of the energy indicator	000000.01 Wh	0000000.1 kJ	0000000.1 kcal
Resolution of volume indicator	00.000001 m^3		

The values of energy and volume test pulses (through the optical interface and at pulse outputs), depending on the permanent flow rate value, are presented in Table 6.2.

Table 6.2

Permanent flow value, q_p, m^3/h	Volume pulse value, l/pulse	Energy pulse value, when energy measurement units are selected as:		
		kWh, MWh	GJ	Gcal
0.6	0.002	0.1 Wh/pulse	0.5 kJ/pulse	0.1 kcal/pulse
1.0	0.002	0.2 Wh/pulse	1 kJ/pulse	0.2 kcal/pulse
1.5	0.004	0.2 Wh/pulse	1 kJ/pulse	0.2 kcal/pulse
2.5	0.005	0.5 Wh/pulse	2 kJ/pulse	0.5 kcal/pulse
3.5	0.02	1 Wh/pulse	5 kJ/pulse	1 kcal/pulse
6.0	0.02	1 Wh/pulse	5 kJ/pulse	1 kcal/pulse
10.0	0.05	2 Wh/pulse	10 kJ/pulse	2 kcal/pulse
15.0	0.05	5 Wh/pulse	20 kJ/pulse	5 kcal/pulse
25	0.05	5 Wh/pulse	20 kJ/pulse	5 kcal/pulse
40	0.2	10 Wh/pulse	50 kJ/pulse	10 kcal/pulse
60	0.2	10 Wh/pulse	50 kJ/pulse	10 kcal/pulse

6.4.2. Activation of the test mode by the control button

The test mode (TEST) can be activated by the button (or through the optical interface with the programme HEAT3-SERVICE). In this case, the water volume simulation feature is not available. Therefore, the test mode does not interfere with the normal operating mode (measured energy and volume are summed up at the operation mode registers).

The activation of the test mode requires the following:

- By pressing and holding the button, select the INF page on the display;
- by short presses of the button, select “tESt On Wh” on the display (to activate energy pulses output through the optical interface) or “tESt On m3” (to activate volume pulse output through the optical interface);
- press and hold the button, the security password entry window will turn on:
- by pressing and holding the button*, activate the test mode (the indication “TEST” will appear at the top of the display)

*NOTE.

The activation of the TEST mode by the button is additionally protected by a password. After pressing and holding the button, a four-digit password input window and the flashing first digit will appear first of all:

PS: 0_ _ _
INF

The first digit is selected by shortly pressing the button. The second digit position is caused to flash by pressing and holding the button, then the second digit is selected. In this way, all the four digit of the password are entered. If the input is correct, the indication PASS will appear for a short time after setting the fourth digit and pressing and holding the button, and the meter will switch to the TEST mode. If the input is incorrect, the indication FAIL will appear for a short time and the meter will return to the operation mode. The activation procedure will have to be repeated from the beginning.

The preset password value: **0001.**

6.4.3. Activation of the Test – Service mode by the jumper and the button

By short-circuiting the contacts SERVICE (by breaking the partition at the back side of the electronic unit of the meter or by removing the protective service seal if the partition was already broken before), the SERVICE mode will be activated and the symbol “<->” will be displayed. This mode allows changing the configuration parameters of the meter similarly to the transport mode (see Paragraph 5.2.2).

In this case, the test mode (TEST) is activated through the optical interface (with the programme HEAT3-SERVICE) or by the press-button:

- by short presses of the button, select “tESt On Wh” on the display (to activate energy pulse output through the optical interface) or “tESt On m3” (to activate volume pulses output through the optical interface);
- by pressing and holding the button, activate the test mode (the indication “TEST” will appear at the top of the display – it will takes 150s).
- the possibility of service configuration.

The test mode functions specified in Paragraph 6.4.2 will be activated (volume pulses output will turn on). Also, the possibility to turn on flow simulation will be activated (to determine the energy measurement error tolerance without using a real flow).

For determining the energy measurement error tolerance, automatic flow pulses simulation is designed: by pressing the button and holding it for more than 5 seconds when the meter is in the TEST mode, flow measurement is terminated and nominal flow pulse simulation is started (the indication “SF” periodically appears on the display). After 2.5 minutes, simulation ends, the indication “SF” disappears, the accumulated readings of flow volume and energy can be taken and used for determining the energy measurement error tolerance.

6.4.4. Deactivation of the Test (and Service) mode

The Test (and Service) mode can be deactivated through the optical interface (with the programme HEAT3-SERVICE) or by the press-button:

- by short presses of the button, select “tESt OFF” on the display;
- by pressing and holding the button, deactivate the test mode (the indication “TEST” will disappear on the display).

The Test (and Service) mode will also deactivate automatically 12 hours after its activation.

7 VERIFICATION

The metrological control of the parameters of the meter is performed according to LST EN1434-5.

8 TRANSPORTATION AND STORAGE

The packaged meters can be transported by any covered vehicles. During transportation, the meters must be reliably secured in order to prevent shocks or risk of movement inside the vehicle.

Protect the meters against mechanical damage and shocks.

The rooms where the meters are kept must be free from aggressive, corrosive materials.

Transportation and storage conditions:

– temperature: -25 – +35 C

– humidity: max. 60%.

Annex A

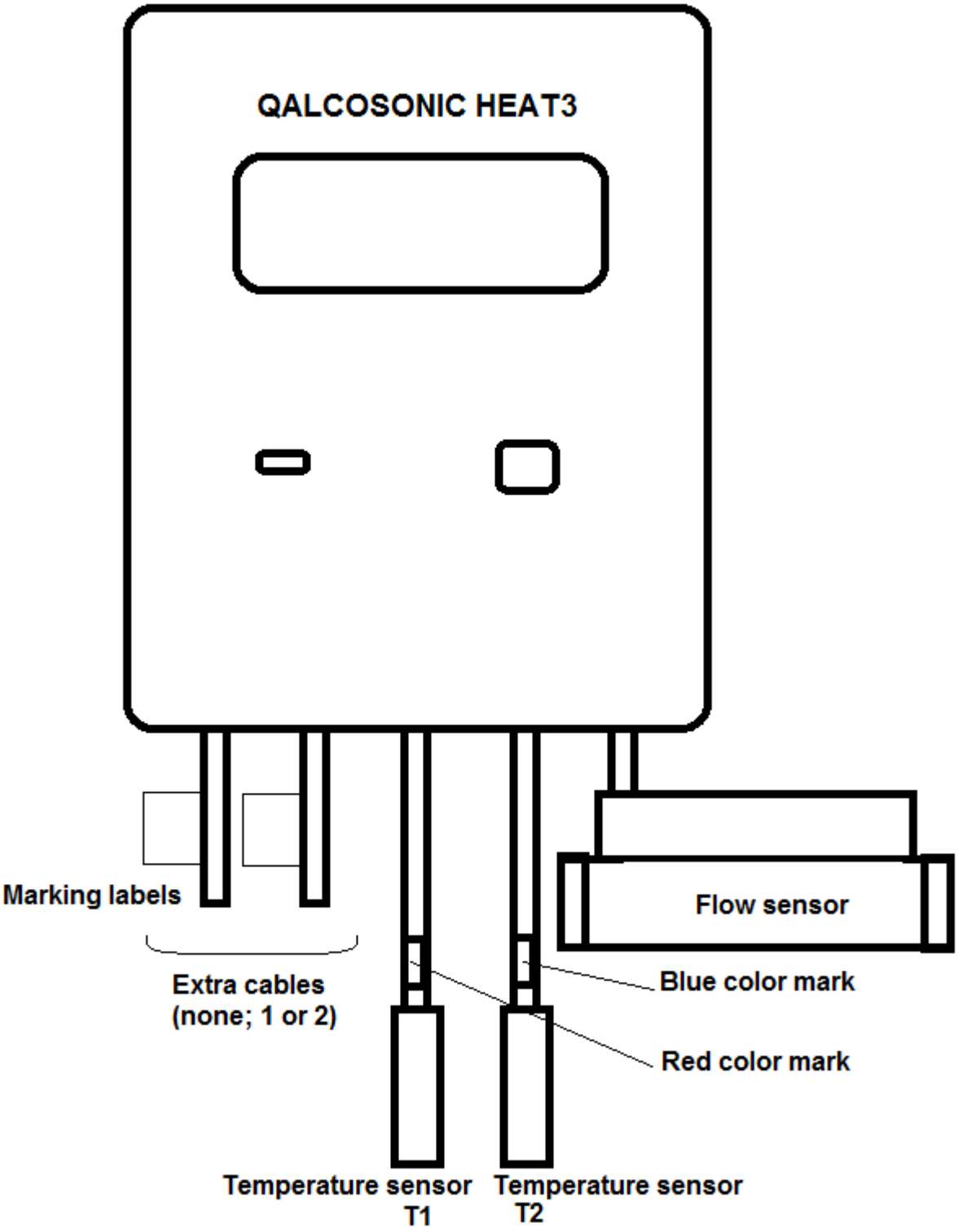

Fig. A1. Meter connection diagram

Annex A (continued)

Table A1 Destination and marking of the extra cables of the heat meter

Destination of the cable	Marking of the cable***	Destination of the wire	Colour of the wire
Mbus 1 interface	MBUS1	Line	brown
		Line	white
Mbus 2 interface	MBUS2	Line	brown
		Line	white
Mbus interfaces (two) *	MBUS	Mbus1 Line	brown
		Mbus1 Line	white
		Mbus2 Line	yellow
		Mbus2 Line	green
1st pulse input/output	PULS1	Pulses (+)	brown
		Common (-)	white
2nd pulse input/output	PULS2	Pulses (+)	brown
		Common (-)	white
Pulse inputs/outputs (two) *	PULS	Pulses1 (+)	brown
		Common1 (-)	white
		Pulses2 (+)	yellow
		Common2 (-)	green
MODBUS interface	MODBUS	Line A	brown
		Line B	white
		24 V AC/DC**	yellow
		24 V AC/DC**	green
CL interface	CL	CL+	brown
		CL-	white
MiniBus interface	MINIBUS	Line+	brown
		Line-	white
For external power supply from 230V AC mains	230V AC	230V L	brown
		230V N	white
For external power supply from 24V AC/DC source	24 V AC/DC	24 V AC/DC	brown
		24 V AC/DC	white

*The option for the case when two extra cables are included at a time.
**Not used when the meter is powered from an external power supply source.
***When a second extra cable is not included, the MBUS1 cable is not marked additionally.

Annex B

B1. The overall dimensions of calculator of heat meter QALCOSONIC E3

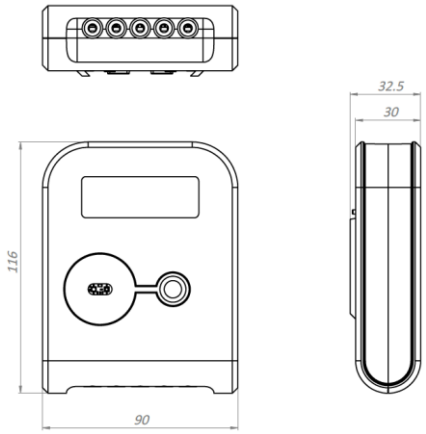

B2. Sizes and dimensions of heat meter QALCOSONIC E3

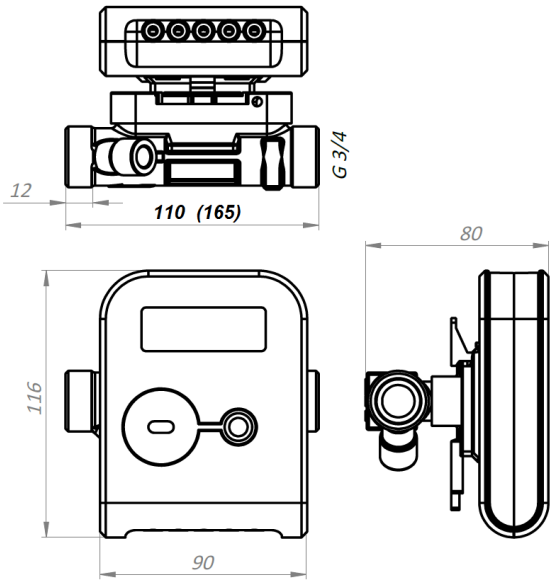

Fig. B2.1 Flow sensor q_p= 0.6/1.0/1.5 m^3/h
Length L=110 mm (L=165 mm); connection type: thread G3/4“

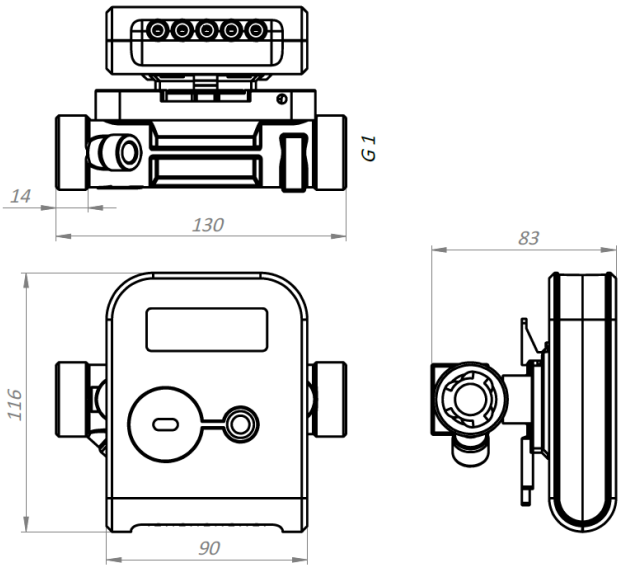

Fig. B2.2 Flow sensor q_p= 2.5/1.5 m^3/h
Length L=130 mm; connection type: thread G1“

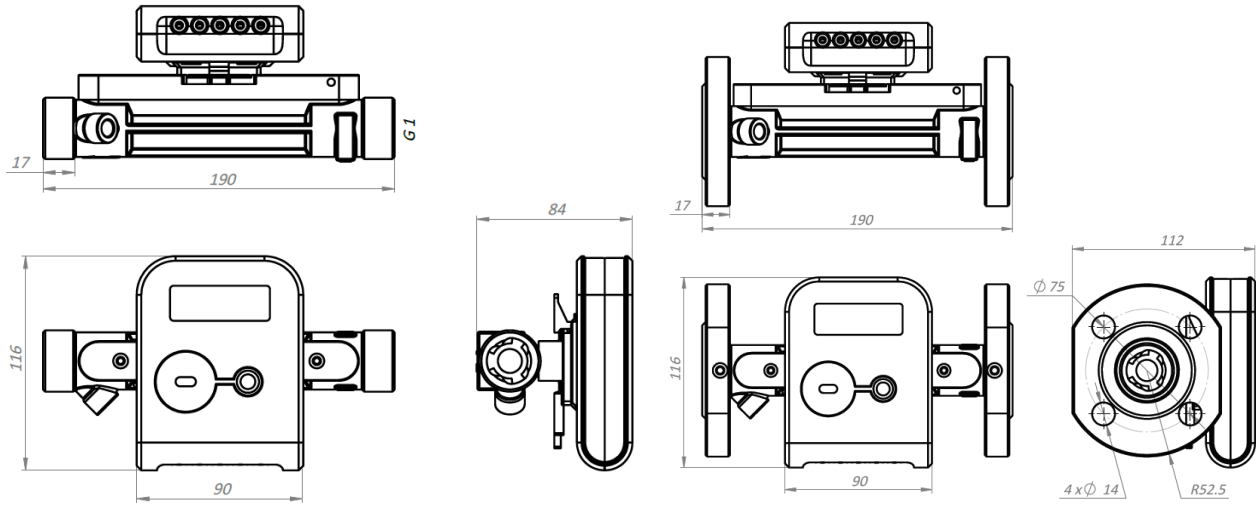

a) **b)**

Fig. B2.3 Flow sensor q_p= 0.6/1.0/1.5/2.5 m^3/h; L=190 mm
a) connection type: thread G1“; b) connection type: flanges DN20

Annex B (continued)

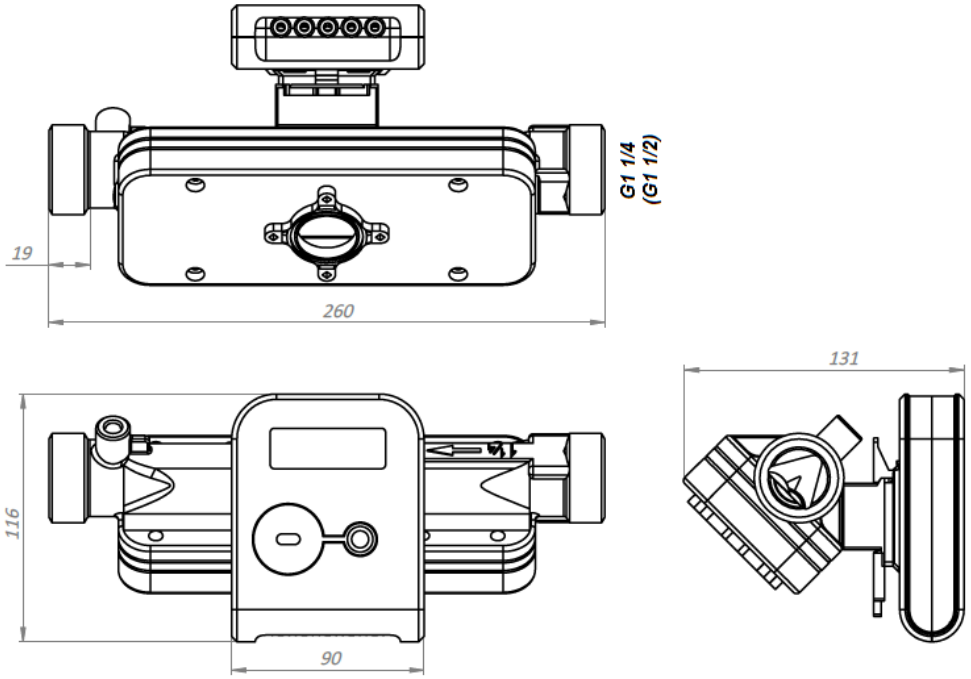

a)

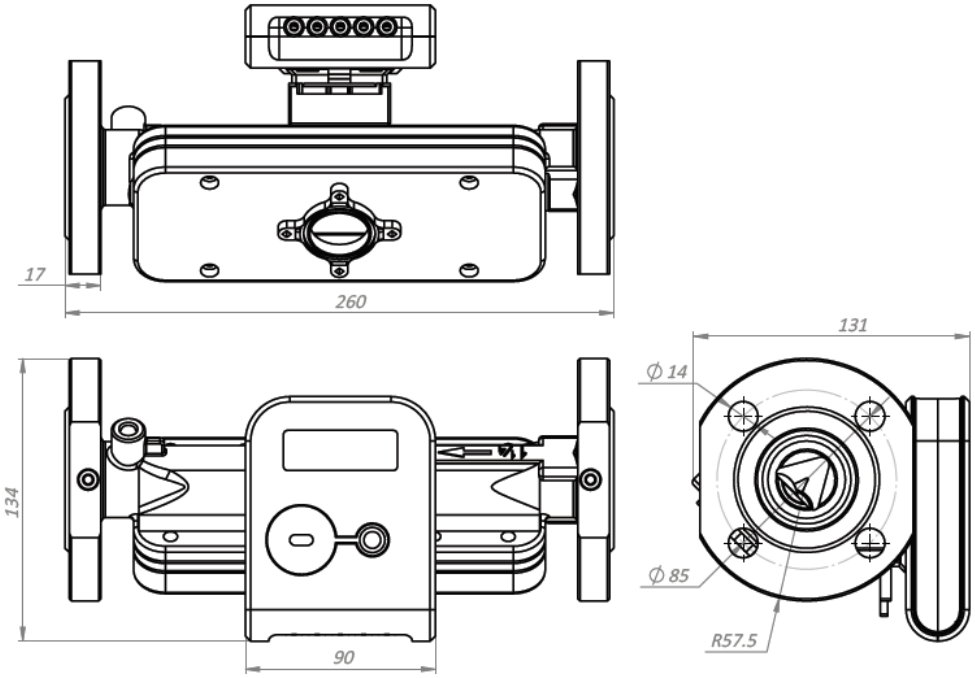

b)

Annex B (continued)

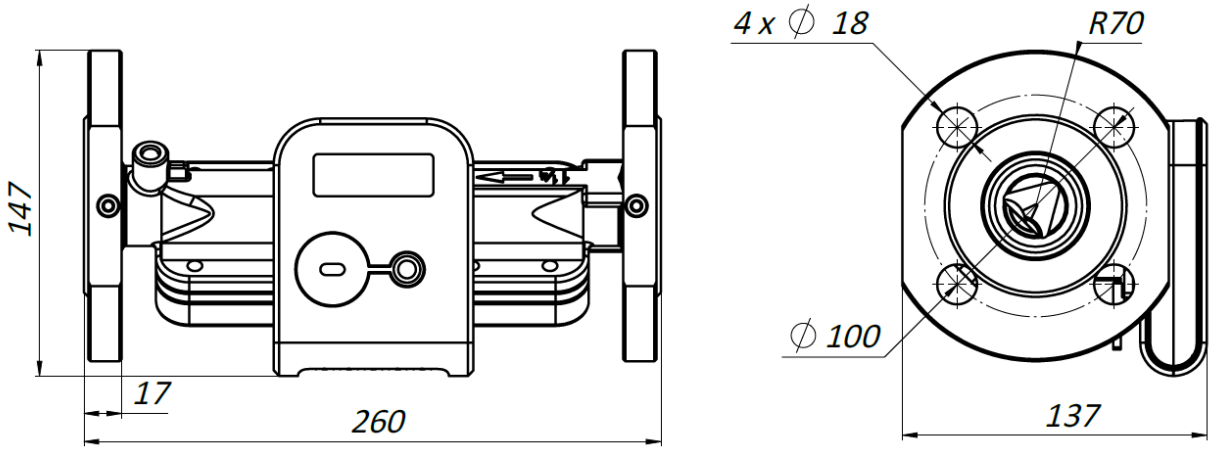

c)

Fig. B2.4 Flow sensor q_p= 3.5/6.0 m^3/h; L=260 mm
a) connection type: thread G11/4“ (G1 1/2“); b) connection type: flanges DN25;
c) connection type: flanges DN32

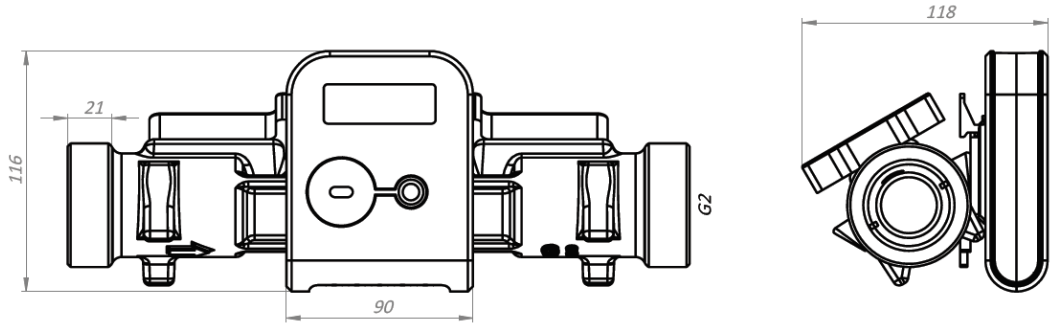

a)

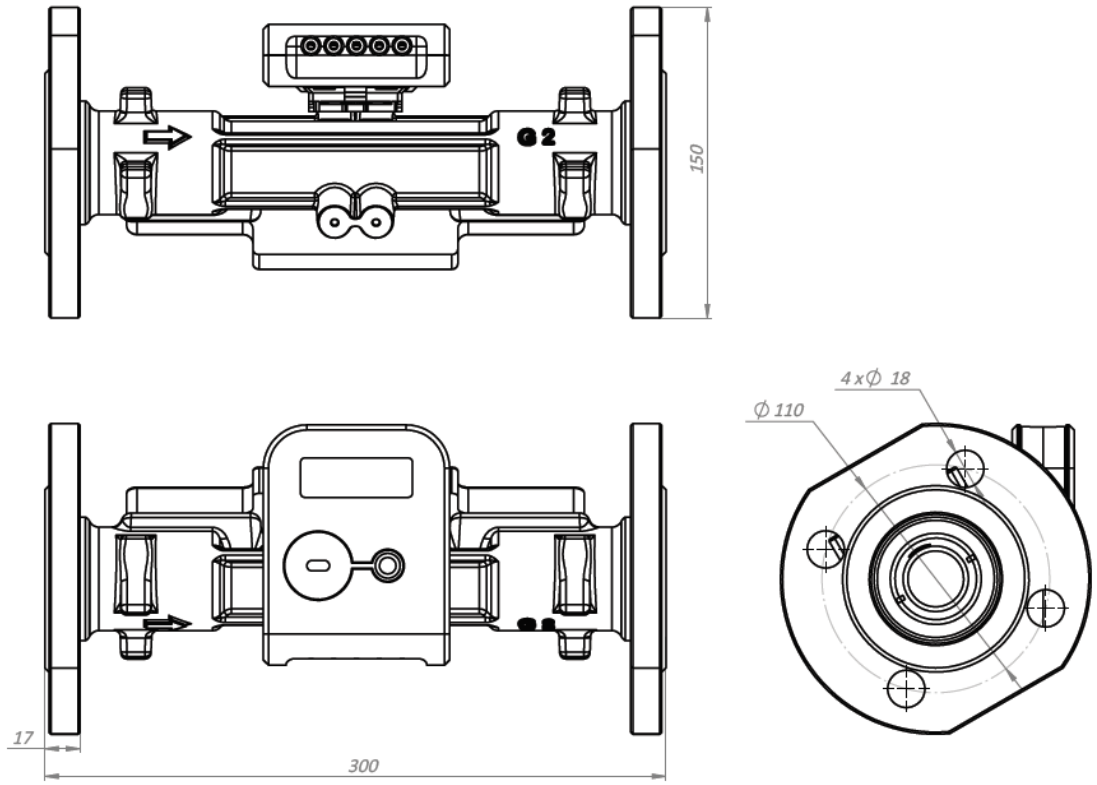

b)

Fig. B2.5 Flow sensor q_p= 10.0 m^3/h; L=300 mm
a) connection type: thread G2“; b) connection type: flanges DN40

Annex B (continued)

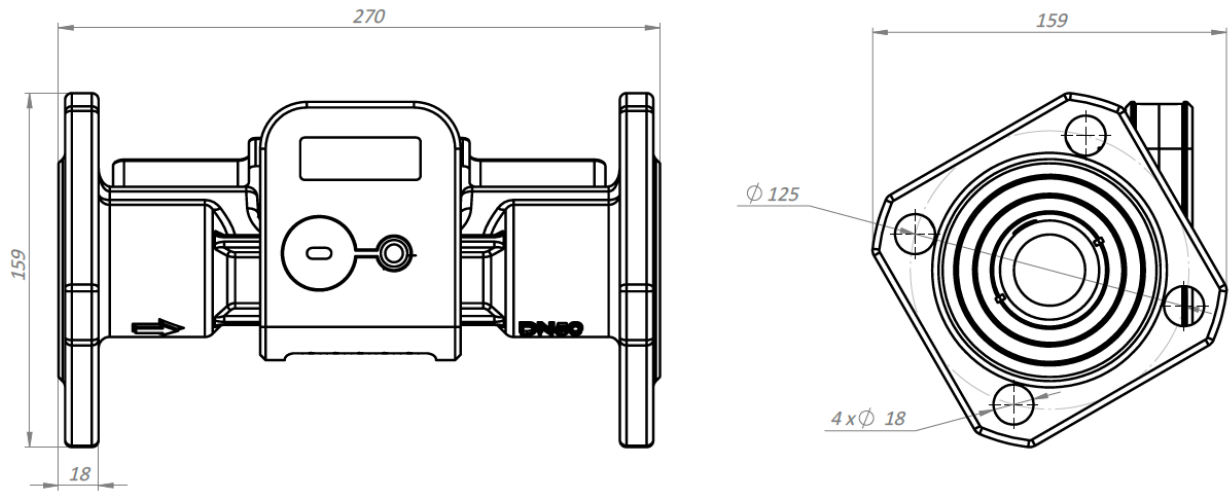

Fig. B2.6 Flow sensor q_p= 15 m^3/h; L=270 mm; connection type: flanges DN50

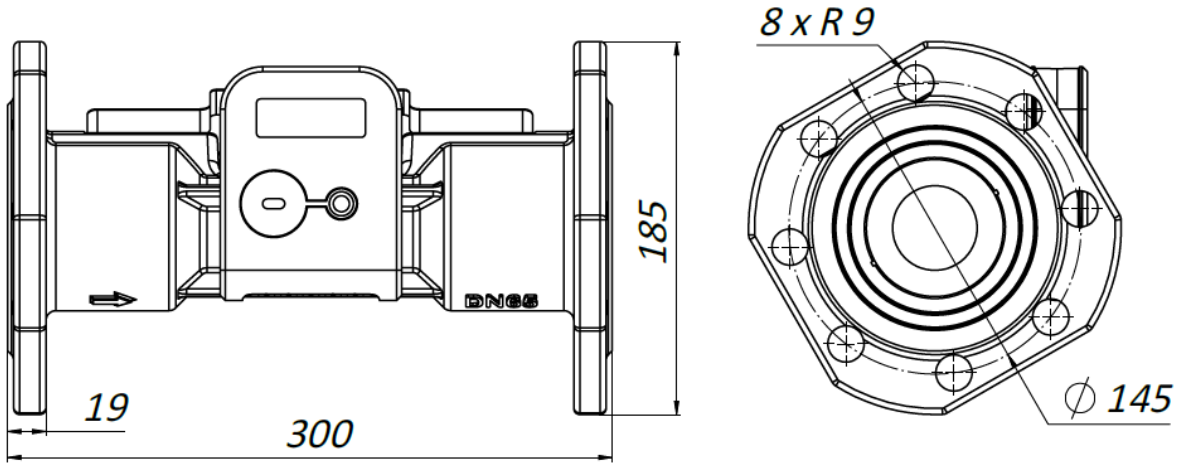

Fig. B2.7 Flow sensor q_p= 25 m^3/h; L=300 mm; connection type: flanges DN65

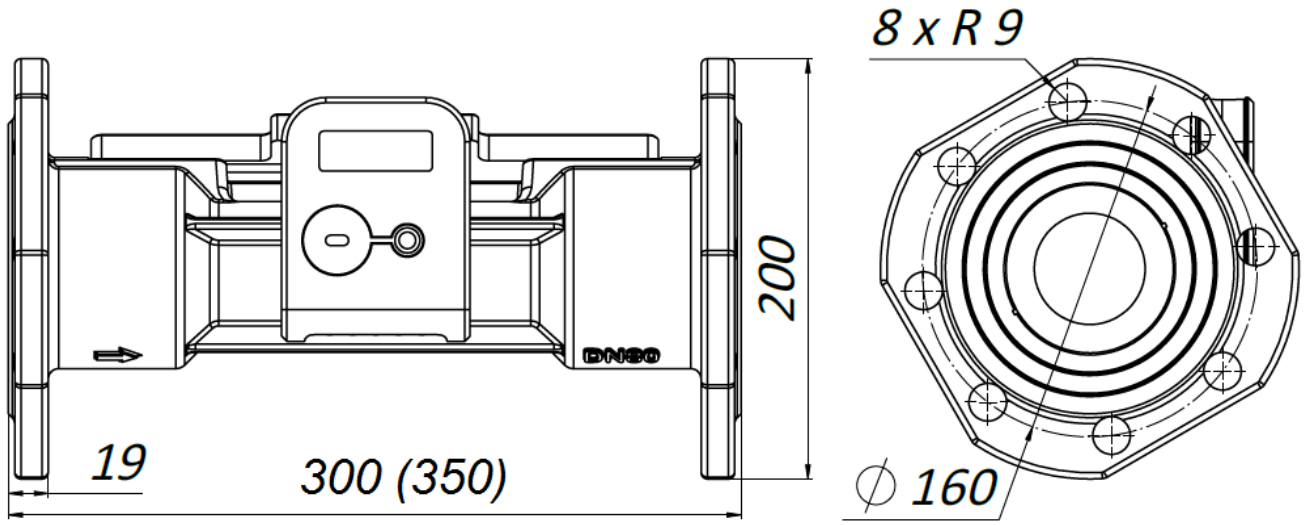

Fig. B2.8 Flow sensor q_p= 40 m^3/h; L=300 mm and L=350 mm; connection type: flanges DN80

Annex B (continued)

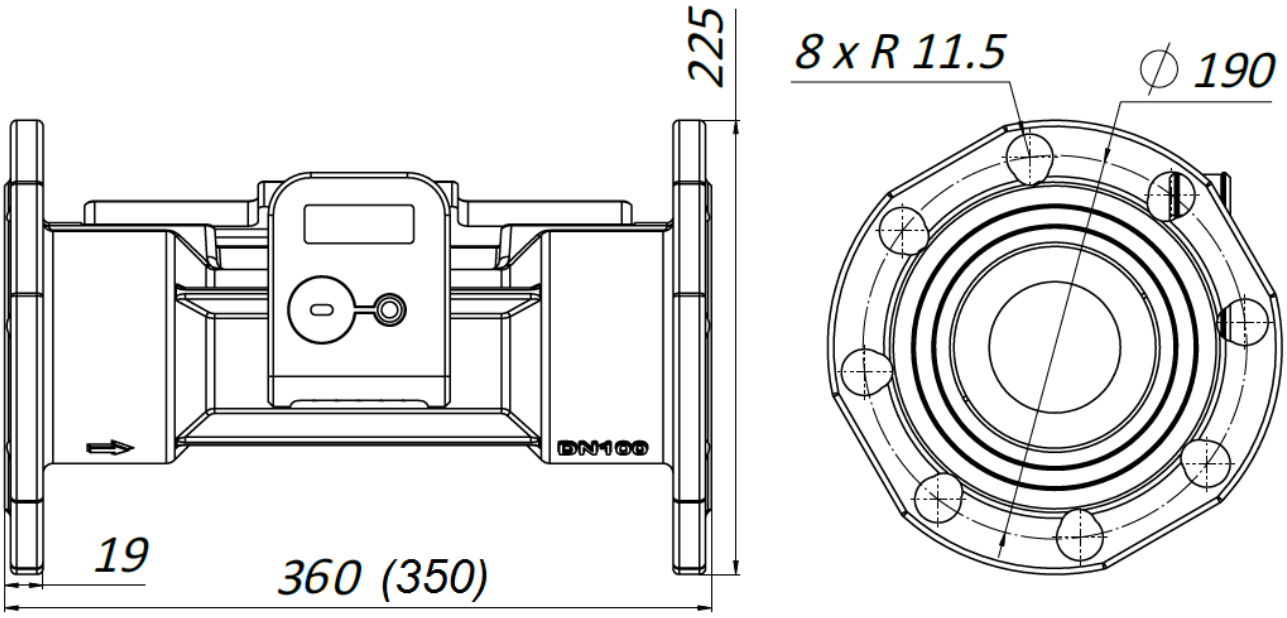

Fig. B2.9 Flow sensor q_p= 60 m^3/h; L=350 mm and L=360 mm; connection type: flanges DN100

B3. Overall dimensions of temperature sensors

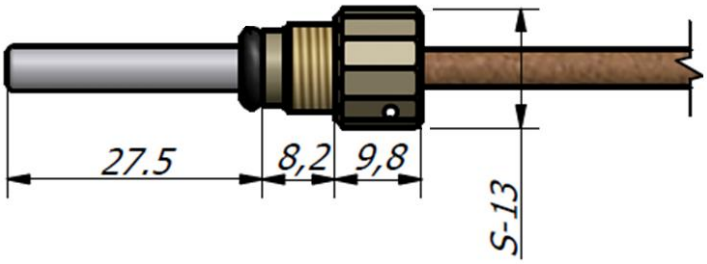

Fig. B3.1 Overall dimensions of the DS type temperature sensor

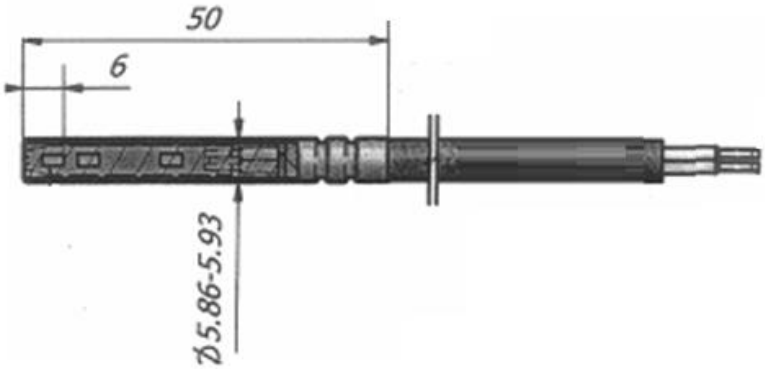

Fig. B3.2 Overall dimensions of the PL type temperature sensor

Annex B (continued)

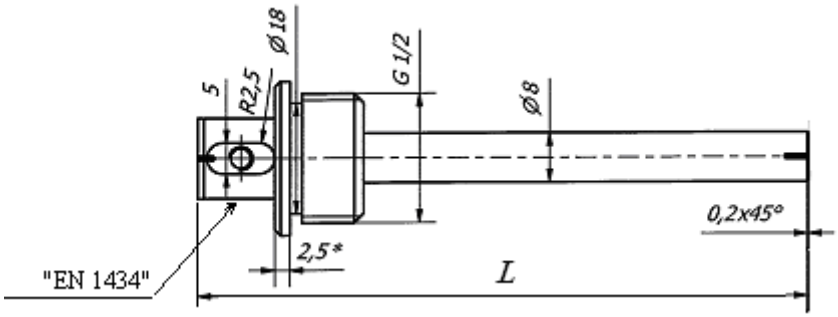

Nominal pipe diameter, mm	Total length of pocket L, mm
DN20...DN100	100
DN125...DN150	135
DN200	225

a) Dimensions of the PL type temperature sensor protective pocket

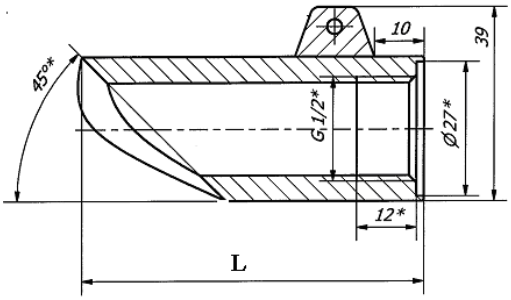

Nominal pipe diameter, mm	L, mm
DN20	79.3
DN25	69
DN32, DN40	59
DN50	49

when pipe DN < 65 mm

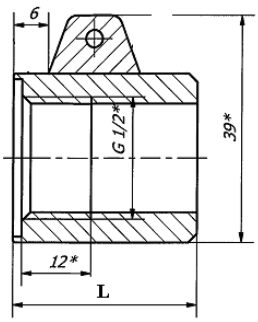

Nominal pipe diameter, mm	L, mm
DN65, DN80, DN125, DN150	32
DN100	18
DN200	90

when pipe DN ≥ 65 mm

b) Dimensions of the fastening bushing of the PL type temperature sensor protective pocket

Fig. B3.3 The dimensions of the fastening bushing of the PL type temperature sensor protective pocket

Annex C

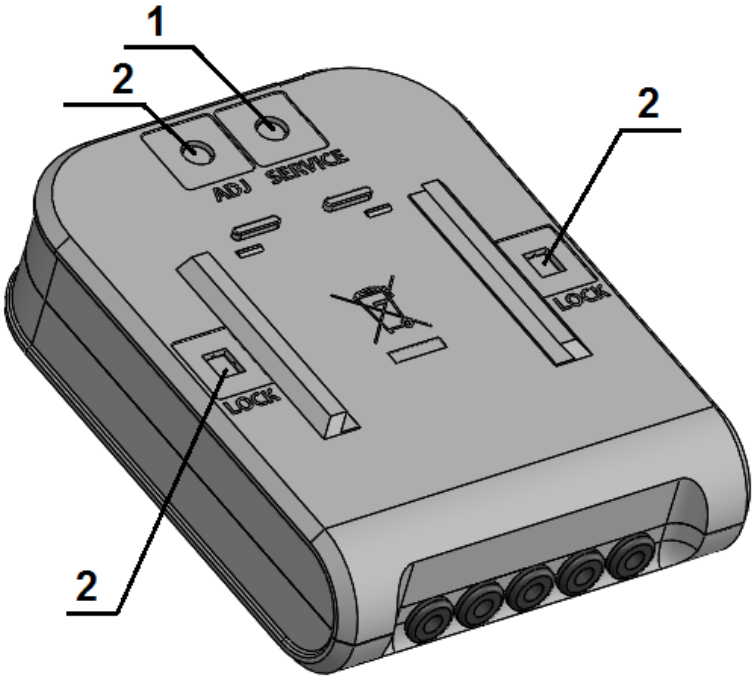

Fig. C1 The sealing diagram of calculator (at the back side of the box):
It shall be sealed additionally only if the breakable partitions are damaged (1 – the supplier's seal is attached after installation; 2 – verification seal stickers are attached)

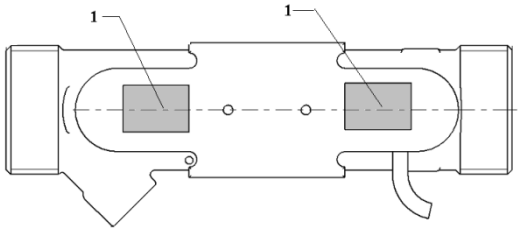

a) Flow sensor qp = 0.6/1.0/1.5/2.5 m^3/h sealing

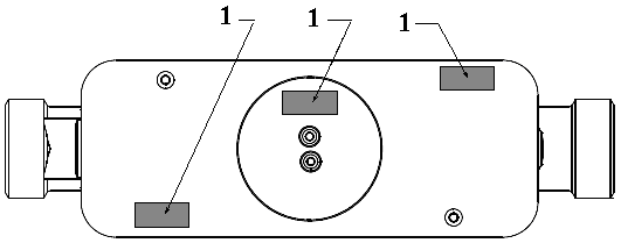

b) Flow sensor qp = 3.5/6.0 m^3/h sealing

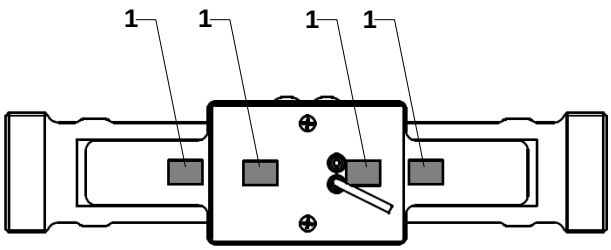

c) Flow sensor qp = 10.0 m^3/h sealing

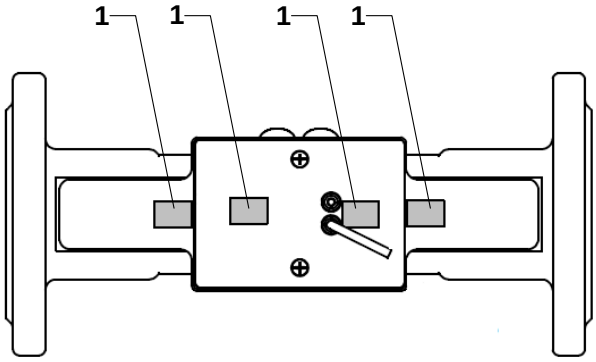

d) Flow sensor qp = 15.0 m^3/h sealing

Fig. C2 The sealing diagram of flow sensors (1 – the manufacturer's warranty seal sticker is attached)

Annex C (end)

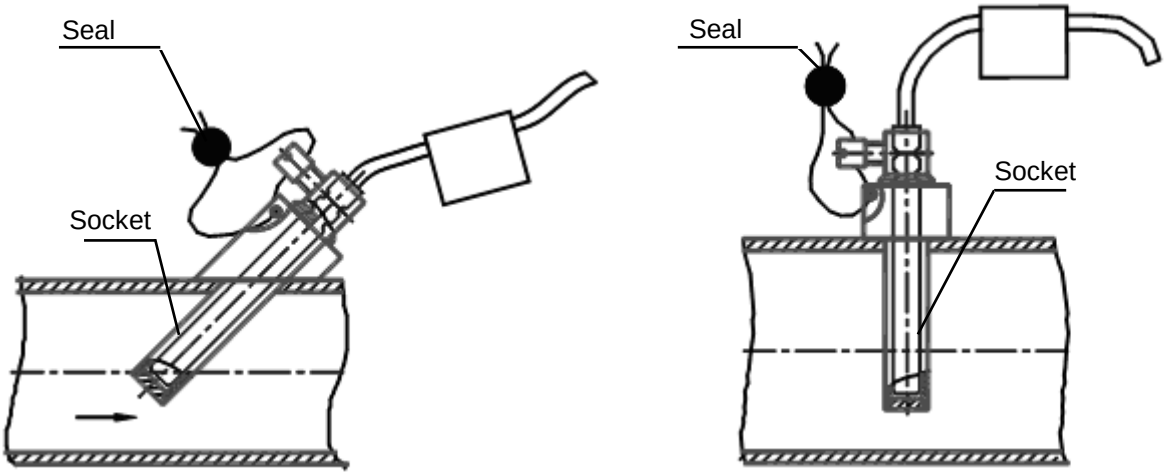

a) turned to an angle of 45° b) perpendicular

a) Installation of the PL type temperature sensor in the pipeline and its sealing diagram.

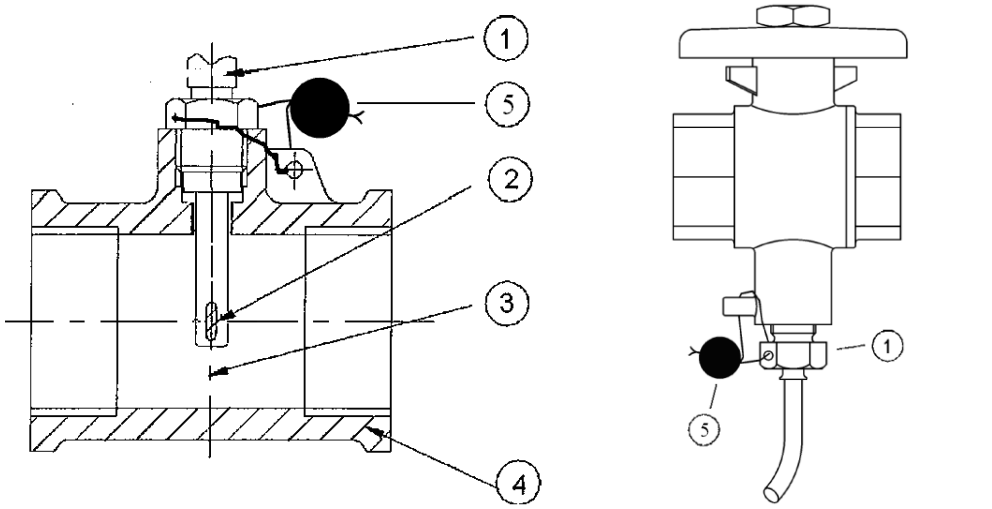

when using a T-piece when using a valve T-piece

1 – temperature sensor; 2 – measuring element; 3 – sensor centreline; 4 – pipe; 5 – mounting seal

b) Installation of the DS type temperature sensor in the pipeline and its sealing diagram.

Fig. C3 The diagrams of the installation of temperature sensors in the pipeline and their sealing

MANUFACTURER'S WARRANTY

The manufacturing plant warrants the compliance of the parameters of the meter with the technical requirements specified in Section 2 of this document provided that the user observes the transportation, storage, and operation conditions.

The warranty time is 12 months from the start of the operation but not later than 18 months from the day of manufacture.

The address of the manufacturer:

AXIOMA Metering UAB, Kulautuvos g. 45a, LT47190 Kaunas, Lietuva / Lithuania
phone: (8 - 37) 360234; fax. (8 - 37) 360358.