## Product description

The Non-full-tube electromagnetic flowmeter is a new type offlowmeter developed by our company that can measure liquid flow undernon-full-tube conditions. Non-full pipe flowmeter is an automatic flowmeasuring instrument that continuously measures fluid flow in open pipelines(such as semi-pipe flow sewage pipes and large flow pipes without over flowweirs) using the flow-area method. It can measure and display data such asinstantaneous flow rate, flow rate, and accumulated flow rate. It is especiallysuitable for the measurement of municipal rainwater, wastewater, sewagedischarge and irrigation water pipes.

The non-full-tube flowmeter is composed of an electromagnetic flowrate sensor, a liquid level sensor and a flow indicator, which contin uouslymeasures the flow velocity and level of the fluid in the pipe. The user onlyneeds to enter the inner diameter of a round pipe or the width of a square pipe.The non-full-pipe flowmeter will automatically calculate the flow inthe pipeline and automatically display the measurement parameters such asinstantaneous flow, flow rate, and accumulated flow in the pipeline.

## Product features

- Can be used for flow measurement of open non-full pipe (round pipe, rectangular pipe or other special-shaped pipe);
- Can be used for continuous measurement of municipal rainwater, wastewater, sewage discharge and irrigation water pipelines;
- Can realize forward and reverse two-way flow measurement;
- The sensor can work reliably for a long time under the harsh scene and sewage water quality;
- Flow velocity measurement range 0.05-10m / s;
- The flow measurement accuracy is high, and it is not affected by factors such as downstream, direct current, blockage, etc.
- The large-screen backlight LCD display can clearly read the measurement data under strong light or at night;
- Instrument display and output functions are complete, it can display instantaneous flow, flow rate, cumulative flow and other data, and has RS485 interface (optional);
- With GSM and GPRS wireless data remote transmission function (optional);
- It has the functions of timing, counting and clocking out of power.

## Technical parameter

| Item | Technical parameter |
|---|---|
| Applicable medium | Various conductive liquids |
| Caliber range | DN100-DN2000 |
| Lining type | Polychloroprene rubber, F46, PTFE can be specially customized |
| Electrode type | 316L, Ha B, Ha C, Titanium, Tantalum, Platinum-iridium alloy, Stainless steel tungsten carbide |
| Pressure range | 1.6Mpa; (high pressure needs to be customized) |
| Temperature resistance | -25~80°C |
| Accuracy | ±2.5% |
| Protection level | Sensor IP65\IP67\IP68 (optional), converter IP65 |
| Output type | Frequency, pulse, 4-20mA, RS485, Modbus protocol; Hart protocol (optional), Profibus DP (optional) |
| Power supply | 85~250V, 45~63Hz, 20VDC --- 36VDC |

## Dimensional drawing of non-full tube electromagnetic flowmeter

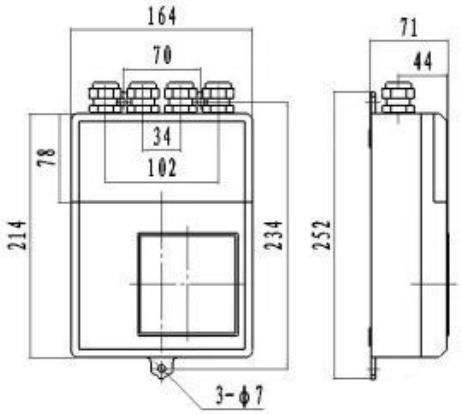


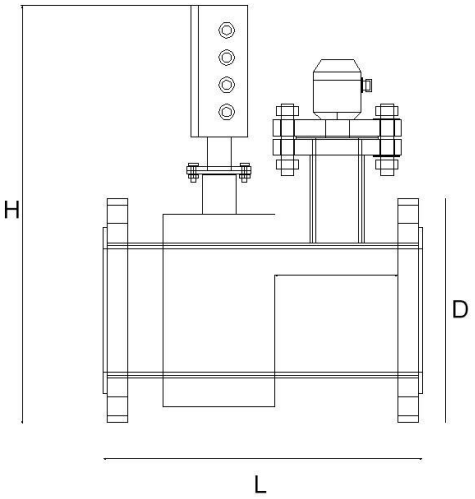

| Size(mm) | L (mm) | H (mm) | D (mm) | L2 (mm) | |
|---|---|---|---|---|---|
| | | | | PTFE | F46/ PFA/ Rubber |
| 100 | 350 | 455 | 215 | 4 | 5 |
| 125 | 350 | 460 | 245 | 4 | 5 |
| 150 | 400 | 465 | 280 | 4 | 5 |
| 200 | 450 | 515 | 335 | 4 | 5 |
| 250 | 450 | 570 | 390 | 4 | 5 |
| 300 | 500 | 620 | 440 | 4 | 5 |
| 350 | 500 | 680 | 500 | 4 | 5 |
| 400 | 500 | 745 | 565 | 4 | 5 |
| 450 | 550 | 795 | 615 | 4 | 5 |
| 500 | 550 | 850 | 670 | 4 | 5 |
| 600 | 600 | 960 | 780 | 4 | 5 |
| 700 | 700 | 1070 | 895 | 4 | 5 |
| 800 | 800 | 1195 | 1015 | 4 | 5 |
| 900 | 900 | 1295 | 1115 | 4 | 5 |
| 1000 | 1000 | 1410 | 1230 | 4 | 5 |
| 1200 | 1200 | 1630 | 1450 | 4 | 5 |
| 1400 | 1400 | 1855 | 1675 | 4 | 5 |